SYMBOL DEFINITION		
A DIMENSION WITHOUT AN INSPECTION REPORT SYMBOL (□) DOES NOT REQUIRE INSPECTION. IT MAY BE CONTROLLED ON THE INDIVIDUAL COMPONENT DRAWING.	TOTAL NO OF INSPECTIONS REQUIRED	15
	LAST NO. USED	15

MISSING SYMBOLS
1-2

DWG STATUS					ZONE	REVISION HISTORY	AUTH	DR	AP/D1	AP/D2	AP/D3
DATE	STG	REV	N/P	CHG							
27FE04	R	02	-	-		REVISED PD	252119	MJM	MJM	MJM	MPR
07SE04	R	03	-	-		12010300 - REVISED PER NIN EWO BGLTS ALL PARTS - REVISED TQD	252892	MJM	MJM	MPR	M
12OCO4	R	04	-	-		12059168, 12059255 & 12066082 - REVISED NON PHYSICAL ECL TO AGREE WITH IMSTR0318	259625	RTV	JVM	MPR	
03SE07	R	05	-	-		ALL PARTS - REMOVED OPTIONAL CONSTRUCTIONS VIEWS & CONSTRUCTION LINE ALLOWABLE VIEWS; ADDED SEALING RIB NOTE, SEALING RIBS VIEWS, COLUMN "A" AND DIMS (2 PLCS)	402207	JBD	JVM	MPR	
29SE08	R	06	-	-		13713913 - RELEASED	406277	RRR	AGN	RRR	
15JA09	R	07	-	-		13750421 - RELEASED	407099	JBD	AUG	MPR	
18MY09	R	08	-	-		13713913 - OBSOLETE	407723	RRR	JVM	RRR	L
03JA11	R	09	-	-		12059168 - ADDED ALTERNATE MATERIAL SPEC	412958	MAL	MAL	MAD	

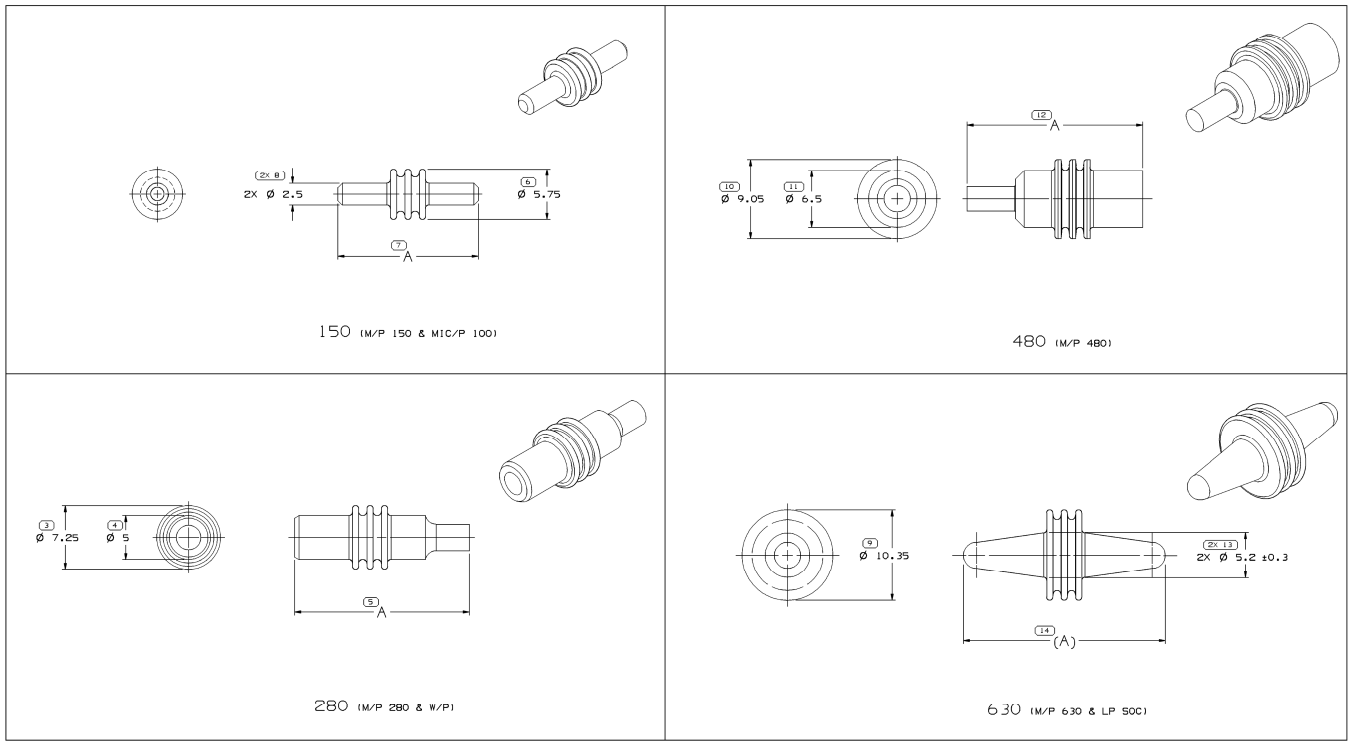

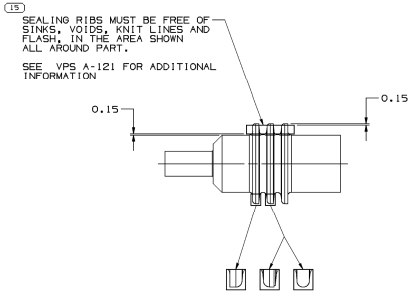

SEALING RIBS MAY DIFFER AS SHOWN

NOTES

1. UNLESS OTHERWISE SPECIFIED AND/OR INDICATED:

   DIMENSIONS ARE TO FACE OF VIEW SHOWN AND AUTOMATICALLY ROUNDED BY COMPUTER FOR INSPECTION (SEE MATH MODEL FOR PRECISE DIMENSIONS). FOR ALL OTHER DIMENSIONS NOT SHOWN BUT REQUIRED FOR TOOL BUILD, SEE MATH MODEL FOR PRECISE TOOL PATH DATA.

2. SEALING RIBS ARE IDENTICAL, EXCEPT AS SHOWN.
3. THIS PART IS NOT CONTROLLED FOR AUTOMATIC FEEDING.
4. THIS PRODUCT IS NOT CATEGORIZED AS AN APPEARANCE ITEM, MINOR IMPERFECTIONS INCLUDING, BUT NOT LIMITED TO, FLOW MARKS, COLOR BLEMISHES, GATE VESTIGE, AND SOFT FLASH THAT DO NOT AFFECT THE FIT, FORM, OR FUNCTION OF THE PART ARE PERMISSIBLE PER NAP 4.10-18.
5. P/N 13713913 MUST BE POST-BAKED FOR 4 HOURS AT 400°F.

PART NO	REV	N/P	STATUS	MATERIAL SPEC	COLOR (REF ONLY)	ALTERNATE MATERIAL SPEC	TYPE	A	ID CAVITY	VOLUME	NOTES
13750421	01	-	-	SILICONE METHYL/VINYL BLUE	BLU	-	280	19.9 ±0.4	6.7	0.311	-
13713913	01	AA	OBSOLETE	SILICONE METHYL/VINYL GREEN	GRN	-	150	16 ±0.3	5.2	0.135	SEE NOTE 5
12066082	B7	-	-	SILICONE METHYL/VINYL GREEN	GRN	-	480	20 +0.45/-0.3	8.5	0.510	-
12059255	A7	-	-	SILICONE METHYL/VINYL GREEN	GRN	-	630	(23)	9.8	0.507	-
12059168	A9	-	-	SILICONE METHYL/VINYL RED	RED DK	M3469037	150	16 ±0.3	5.2	0.135	-
12010300	08	AA	-	SILICONE METHYL/VINYL GREEN	GRN	M2261001	280	19.9 ±0.4	6.7	0.311	-

| DIMENSIONAL RANGE (MM) | | | | | | |