THIS DRAWING IS UNPUBLISHED. RELEASED FOR PUBLICATION -,- .
© COPYRIGHT - BY TYCO ELECTRONICS CORPORATION. ALL RIGHTS RESERVED.

LOC	DIST
AF	50

REVISIONS

P	LTR	DESCRIPTION	DATE	DWN	APVD
	B2	REVISED PER ECR-07-029192	10DEC07	HMR	KR

1 SUPPLIED IN LOOSE PIECE

3 WIRE SIZE IS #22-#18 AWG.

4 MATING TAB THK IS .032±.001

5 INSULATION RANGE IS .085-.125 DIA.

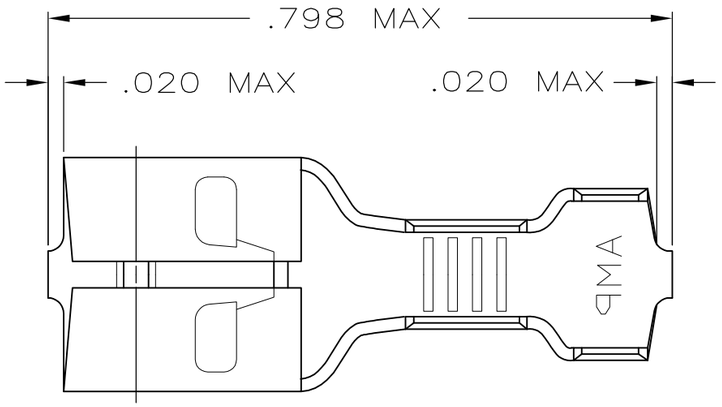

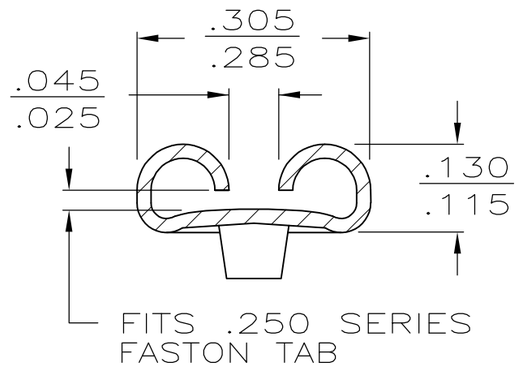

SECTION A-A

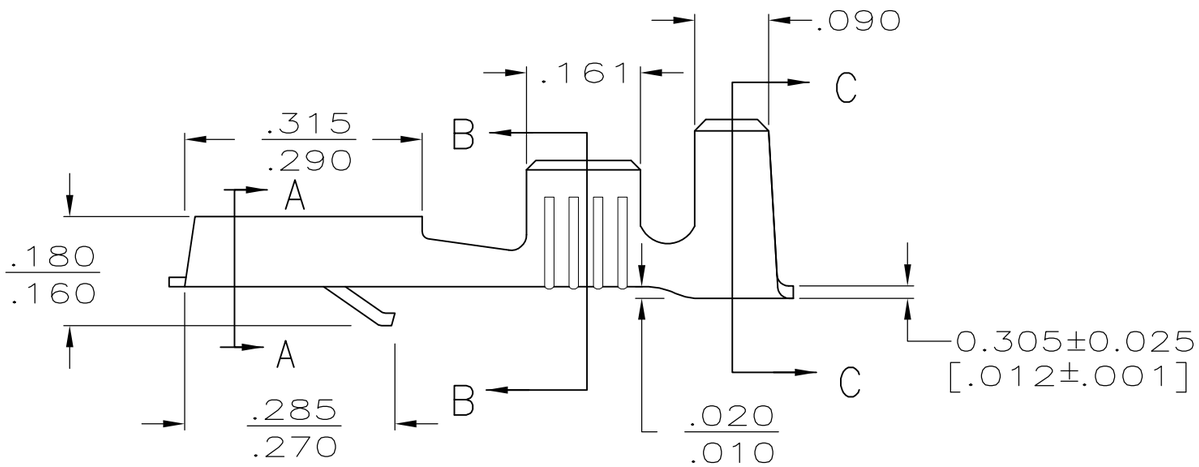

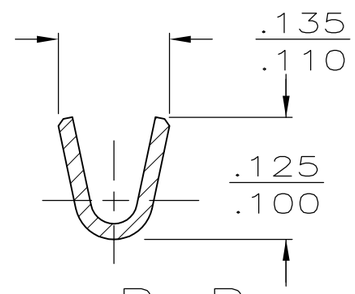

SECTION B-B

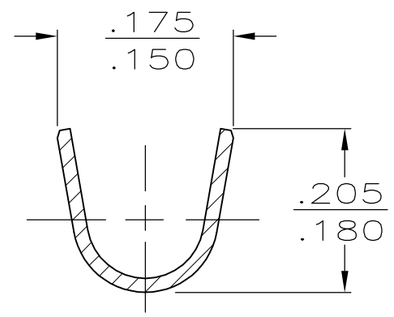

SECTION C-C

60838-1 (60295-2 STRIP)	60838-1
COMBINATION NUMBER	PART NO.

THIS DRAWING IS A CONTROLLED DOCUMENT.

DIMENSIONS: INCHES

TOLERANCES UNLESS OTHERWISE SPECIFIED:

0 PLC	± -
1 PLC	± -
2 PLC	± -
3 PLC	± .015
4 PLC	± -
ANGLES	± -

MATERIAL: BRASS

FINISH: TIN

DWN	JR RUTH	1/29/98
CHK	MS FEHER	1/29/98
APVD	J HUZVAR	1/29/98
PRODUCT SPEC	—	
APPLICATION SPEC	—	
WEIGHT	—	

CUSTOMER DRAWING

Tyco Electronics

Tyco Electronics Corporation
Harrisburg, PA 17105-3608

NAME: RECEPTACLE, FASTIN-FASTON, .250 SERIES

SIZE	CAGE CODE	DRAWING NO	RESTRICTED TO
A3	00779	C-60838	—

SCALE	SHEET	REV
5:1	1 OF 1	B2