D-SUB Protection cap

Plastic design – Black or metallized

RoHS compliant

Description

- Dust cap protecting connector mounting area
- Material: TPE; UL94 V-0
- Color: Black
- Shielded cap protecting against EMI/RFI as well as ESD
- Material: ABS, UL94 V-0; metallized
- Temperature range: -35°C... +85°C

Socket connector

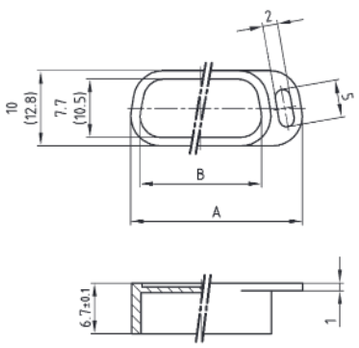

Plug connector

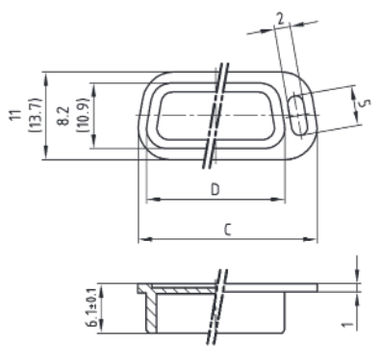

50-pos. = Dim. in (..)

No. of pos.	A	B	C	D
09	22.90	16.20	22.50	16.90
15	31.40	24.70	30.65	25.05
25	44.70	38.00	44.40	38.80
37	61.20	54.50	60.75	55.15
50	58.80	52.10	58.15	52.55

Order data

Protection cap for socket connector

No. of pos.	Design	Part Number
09	Black/Plastic	160X10449X
15	Black/Plastic	160X10459X
25	Black/Plastic	160X10469X
37	Black/Plastic	160X10479X
50	Black/Plastic	160X10959X
09	Metallized plastic	600X518009X
15	Metallized plastic	600X518015X
25	Metallized plastic	600X518025X
37	Metallized plastic	600X518037X
50	Metallized plastic	600X518050X

Protection cap for plug connector

No. of pos.	Design	Part Number
09	Black/Plastic	160X10409X
15	Black/Plastic	160X10419X
25	Black/Plastic	160X10429X
37	Black/Plastic	160X10439X
50	Black/Plastic	160X10969X
09	Metallized plastic	600X517009X
15	Metallized plastic	600X517015X
25	Metallized plastic	600X517025X
37	Metallized plastic	600X517037X
50	Metallized plastic	600X517050X