SYMBOL DEFINITION			MISSING SYMBOL
A DIMENSION WITHOUT AN INSPECTION REPORT SYMBOL (▭) DOES NOT REQUIRE INSPECTION. IT MAY BE CONTROLLED ON THE INDIVIDUAL COMPONENT DRAWING.	TOTAL NO OF INSPECTIONS REQUIRED	89	NO MISSING SYMBOL NUMBER
	LAST NO. USED	80	

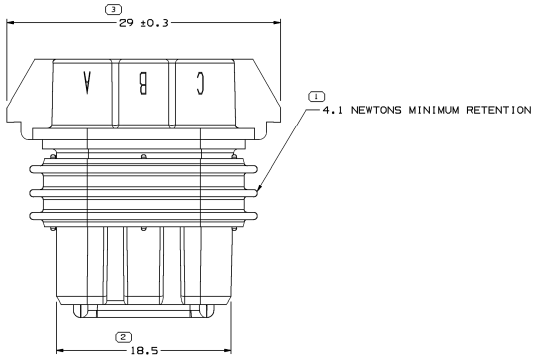

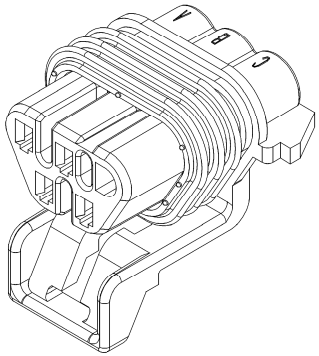

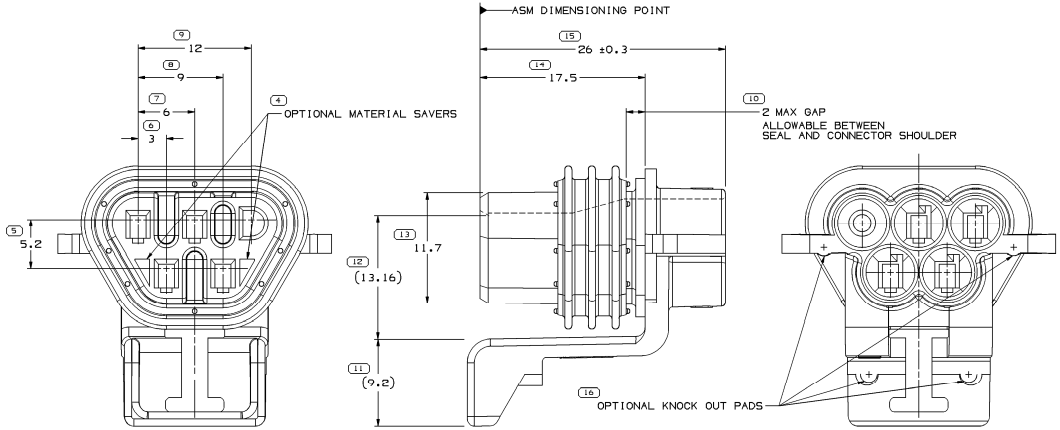

TYPE 101

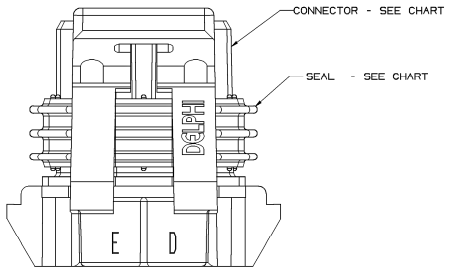

NOTES

1. UNLESS OTHERWISE SPECIFIED AND/OR INDICATED:

   DIMENSIONS ARE TO FACE OF VIEW SHOWN AND AUTOMATICALLY ROUNDED BY COMPUTER FOR INSPECTION (SEE MATH MODEL FOR PRECISE DIMENSIONS). FOR ALL OTHER DIMENSIONS NOT SHOWN BUT REQUIRED FOR TOOL BUILD, SEE MATH MODEL FOR PRECISE TOOL PATH DATA.

2. WHEN PARTS ARE SHIPPED THEY MUST BE PACKED IN PLASTIC BAGS OR SHIPPING CONTAINERS MUST BE LINED WITH PLASTIC LINERS. BAGS OR LINERS MUST BE SEALED TO AVOID FOREIGN MATTER.

3. SEALING CODE 3 - DESIGN WILL PASS SALT FOG AND IMMERSION TEST AFTER CONDITIONING AS SPECIFIED IN ESA-644 (WEATHER-PACK),ESA-710 (METRI-PACK), ESA-650 (UNDERHOOD MICRO-PACK), C-4006 (WORLD CONNECTOR), ETC WHEN MATED TO MATING PART OR EQUIVALENT

4. MAXIMUM CABLE DIAMETER 2.8 MM.

5. THIS PRODUCT IS NOT CATEGORIZED AS AN APPEARANCE ITEM. MINOR IMPERFECTIONS INCLUDING, BUT NOT LIMITED TO, FLOW MARKS, COLOR BLEMISHES, GATE VESTIGE, AND SOFT FLASH THAT DO NOT AFFECT THE FIT, FORM, OR FUNCTION OF THE PART ARE PERMISSIBLE PER DPNP-4.7-CS-01.

6. FOR APPLICATION DATA SEE THE INDIVIDUAL APPLICATION DRAWINGS.

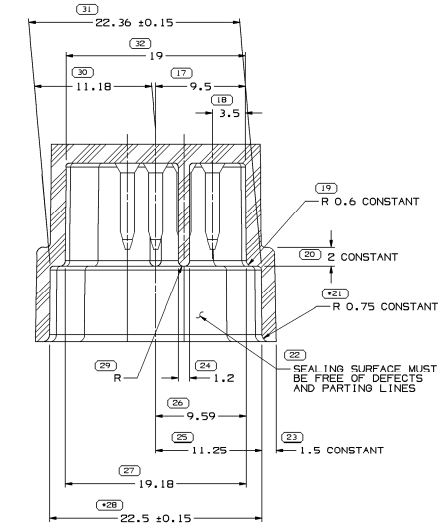

SECTION A-A

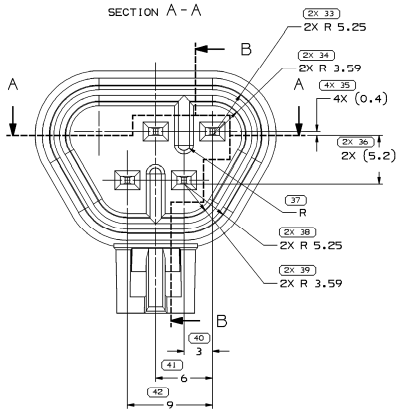

TYPE 101

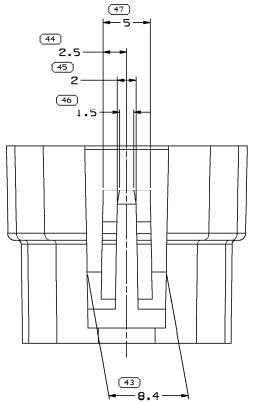

MATING CONNECTOR INFORMATION

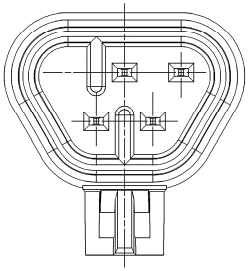

TYPE 102
SAME AS TYPE 101
EXCEPT AS SHOWN

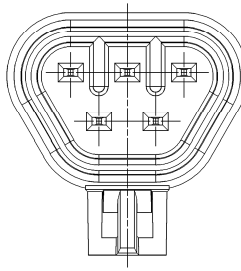

TYPE 104
SAME AS TYPE 103
EXCEPT AS SHOWN

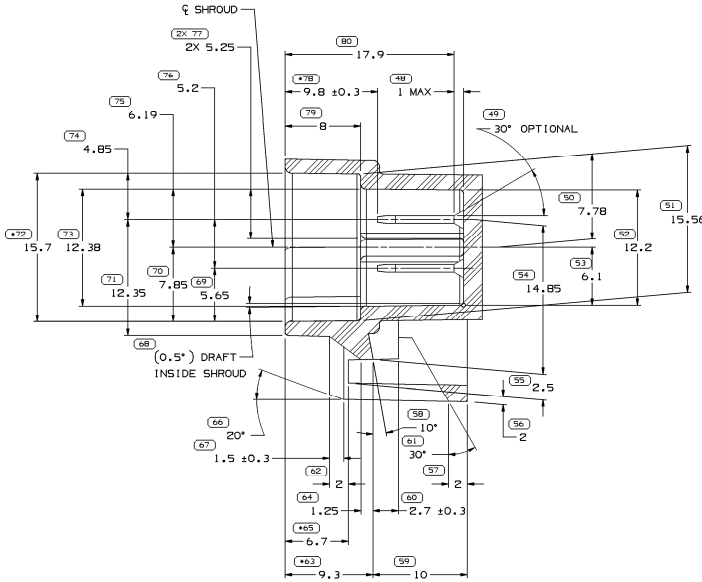

SECTION B-B

NOTES

1. UNLESS OTHERWISE SPECIFIED AND/OR INDICATED:

   DIMENSIONS ARE TO FACE OF VIEW SHOWN AND AUTOMATICALLY ROUNDED BY COMPUTER FOR INSPECTION (SEE MATH MODEL FOR PRECISE DIMENSIONS). FOR ALL OTHER DIMENSIONS NOT SHOWN BUT REQUIRED FOR TOOL BUILD, SEE MATH MODEL FOR PRECISE TOOL PATH DATA.
   ALL RADII 0.4
   DRAFT IS 1° MAX ON ALL OUTSIDE SURFACES
   TERMINALS ARE IDENTICAL
   INDEX RIBS ARE IDENTICAL

2. WHEN USING THIS INFORMATION FOR A NEW DESIGN, REQUEST THE LATEST COPY OF THIS PRINT FROM PACKARD ELECTRIC.

RECOMMENDED MATERIAL: GLASS REINFORCED NYLON OR POLYESTER.

PART NO	REV	N/P	STATUS	CAVITY BLOCKED	TYPE	CONNECTOR	SEAL	REPLACEMENT P/N
12146047	A2	-	-	C	101	12146044 NYLON 66 BLACK	12092843	-
12146046	A2	-	-	C	102	12146043 NYLON 66 MED GRAY	12092843	-
12146045	A3	-	-	NONE	104	12146042 NYLON 66 CRM	12092843	-
12124032	B	-	OBSOLETE	NONE	103	12103967 NYLON 6 BLUE	12092843	12146045
12124031	B	-	OBSOLETE	NONE	104	12103973 NYLON 6 NAT	12092843	12146045
12092842	C	-	OBSOLETE	C	102	12092838 NYLON 6 MED GRAY	12092843	12146046
12092841	C	-	OBSOLETE	C	101	12092837 NYLON 6 BLACK	12092843	12146047

DIMENSION NUMBER	TOOL BUILD TOLERANCE
78	±0.24
72	±0.12
65	±0.12
63	±0.12
28	±0.12
21	±0.12

DRAWING NUMBER						
12092848						
SIZE	SCALE	FRAME NO	SHEET NO	STG	REV	N/P
A1x3	5:1	2 OF 2	1 OF 1	R	03	-

(15) PROCESS SENSITIVE DIM

DIMENSIONS ENCLOSED IN ( ) INDIC
REFERENCE DIMENSIONS AND NO TOLER
VARIES ARE REFERENCE

| DIMENSIONAL RANGE (MM) | | | | | |