SYMBOL DEFINITION			MISSING NUMBERS
A DIMENSION WITHOUT AN INSPECTION REPORT SYMBOL ( ) DOES NOT REQUIRE INSPECTION. IT MAY BE CONTROLLED ON AN INDIVIDUAL COMPONENT DRAWING.	TOTAL NO. OF SYMBOLS ON DRAWING	11	
	LAST NO. USED	12	

DWG STATUS DATE	STG	REV	N/P	CHG	ZONE	REVISION HISTORY	AUTH	DR	APVD 1	APVD 2
12N099	R	01	-	-		ALL PARTS - ADDED DIM	196852	EOV	GMC	JA
05MY01	R	02	-	-		REVISED MATERIAL FROM R0064366 TO R0071784 FOR 12020803.	209713	OT	OT	RC
28SE01	R	03	-	-		UPDATED MATERIAL SPEC. - ALL PARTS	213806	OT	OT	RC
28JA04	U	04	-	-		ALL PARTS - ADDED NOTE TO AREA ON CONNECTOR WHERE PULLOUT RIBS ARE ACCEPTABLE. UPDATED MATERIAL SPECS.	250663	LLJ	LLJ	TM
25FE04	R	05	-	-		ALL PARTS - CORRECTED REVISION LEVELS REVISED DIM 12 NOTE TO STATE "OPTIONAL"	251796	LLJ	LLJ	TM

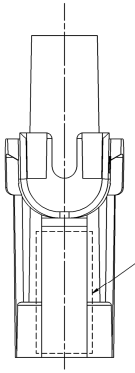

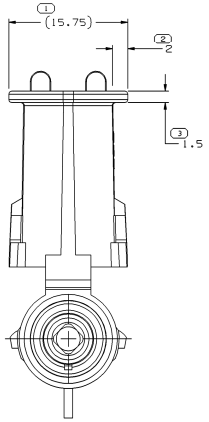

TYPE 102

SAME AS TYPE 101
EXCEPT AS SHOWN

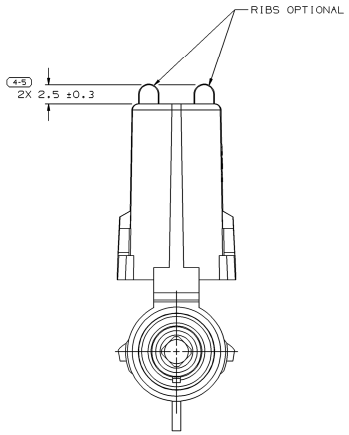

INDEX CODE
-1-
(ALSO SEE HANDBOOK)

TYPE 101

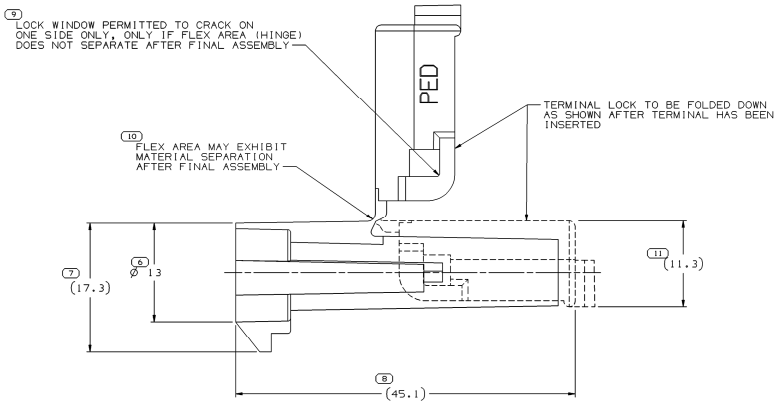

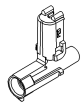

NOTES:

1. UNLESS OTHERWISE SPECIFIED AND/OR INDICATED:
   DIMENSIONS ARE TO FACE OF VIEW SHOWN AND AUTOMATICALLY ROUNDED BY COMPUTER FOR INSPECTION. (SEE MATH MODEL FOR PRECISE DIMENSION)
   FOR ALL OTHER DIMENSIONS NOT SHOWN BUT REQUIRED FOR TOOL BUILD, SEE MATH MODEL FOR PRECISE TOOL PATH DATA.

2. MATING COMPONENTS OR EQUIVALENT:
   CONNECTOR 12015781
   CARLF SEAL 12015323
   TERMINAL 12089040

3. SEALING CODE 3.

4. CAUTION: DO NOT ATTEMPT TO COPY THIS DRAWING WHEN DESIGNING A MATING PART TO A WEATHER PACK CONNECTOR. PLEASE REQUEST THE LATEST COPY OF DRAWING NUMBER 12020084 FROM THE PACKARD ELECTRIC DIVISION.

5. (2.3)X(0.1) RAISED DELPHI CORPORATE BRAND TO BE LOCATED ON ANY EXTERIOR SURFACE, PREFERABLY VISIBLE AT FINAL ASSEMBLY. OPTIONAL CONSTRUCTION TO BE "PED" OR NO LOGO.

6. MATERIAL RECYCLING CODE PER ISO 11469. (2.3)X(0.1) RAISED CHARACTERS AS SHOWN TO BE LOCATED ON ANY EXTERIOR SURFACE. OPTIONAL CONSTRUCTION TO BE NO MATERIAL RECYCLING CODE.

PART NO	STG	REV	N/P	STATUS	TYPE	MATERIAL SPECIFICATION AND COLOR	APPLICATION	REF: TERMINAL GENDER	ASSEMBLY PART NUMBER (S)	ASM MATING PART	VOL CM³
12186965	R	A4	-		102	M3592001 PA66 HS 1M BLK	IN-LINE	12089040/MALE	-	12015791	3.531
12020803	R	05	AC		101	M3592025 PA66 HS 1M GRA MD	IN-LINE	12089040/MALE	-	12077615	3.398
12010996	R	E4	-		101	M3592001 PA66 HS 1M BLK	IN-LINE	12089040/MALE	12047671	12015791	3.398

6 PROCESS SENSITIVE DIMENSION

DIMENSIONS ENCLOSED IN ( ) INDICATE REFERENCE DIMENSIONS AND NO TOLERANCE LIMITS ARE ESTABLISHED

DIMENSIONAL RANGE (MM) CHART E

FROM	0	> 20	> 30	> 70	> 100
TO	20	30	70	100	

TOLERANCE UNLESS OTHERWISE SPECIFIED
(±0.15) (±0.2) (±0.3) (±0.4) (±0.5)
ANGULAR TOLERANCE ±2°

THIRD ANGLE PROJECTION

DO NOT SCALE

USE MATH DATA

UNIGRAPHICS

DWG TYPE: PART DRAWING

STYLE:

VOLUME (CM³): SEE CHART

DISTR CODE:

ROUTING: 6900,6901

UNLESS OTHERWISE SPECIFIED
THIS DOCUMENT IS IN ACCORDANCE WITH ASME Y14.5M-1994 AS AMENDED BY THE ISM GLOBAL STANDARDIZING AND TOLERANCING ADDENDUM-2001. SEPARATE PATTERNS OF FEATURES MAY BE GAGED SEPARATELY REGARDLESS OF DATUM REFERENCES.

ALL DIMENSIONS ARE IN MILLIMETERS

REFERENCE

DELPHI

DELPHI PACKARD ELECTRIC SYSTEMS
WARREN, OH

		DATE
DR		
APVD1	E. MONCISVAIS	30JL96
APVD2	E. BAEZ	05AU96
APVD3	T. MADDEN	28JA04
APVD4		
APVD5		

SUBSTANCES OF CONCERN AND RECYCLED CONTENT PER DELPHI (094900)

MATERIAL: SEE CHART

DRAWING NAME: TAXI CONN W/P SHD

DRAWING NUMBER: 12020814

SIZE	SCALE	FRAME NO	SHEET NO	STG	REV	N/P
A0	4:1	1 OF 1	1 OF 1	R	05	-