D

THIS DRAWING AND DESIGN HEREON CONSTITUTES A PROPRIETARY DESIGN OF PACKARD ELECTRIC DIVISION AND IS NOT TO BE DUPLICATED OR REPRODUCED WITHOUT AUTHORITY OF PACKARD ELECTRIC DIVISION.

DO NOT SCALE

DATE	SYM	REVISION RECORD	AUTHORITY	DR	CK
10SE90	—	ALL PARTS - REDRAWN & UPDATED TO			
		LATEST STANDARDS WITH NO PHYSICAL			
		CHANGE; ADDED NOTE #5 AND REVISED			
		NOTE #1 - 12047673 - WAS ON			
		SEPARATE "C" SIZE DRAWING - REVISION			
		LEVELS REMAIN THE SAME	136029	SM	SM
28MY91	—	ALL PARTS - ADDED INDEX CODE;			
		13.6 REF WAS 13.60 REF; 12.4 REF WAS			
		12.35 REF; 40.5 REF WAS 40.3;			
		12077614 WAS 12047614 - NO REV			
		UPDATE REQ'D	142347	GC	GC
23NO92	—	12041387 - OBSOLETE	920003	TPM	TPM

PART NO. 1207 7616

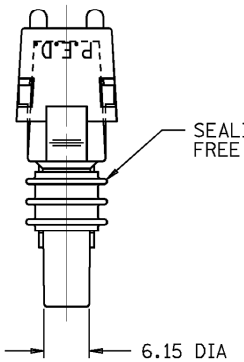

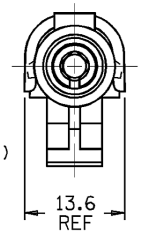

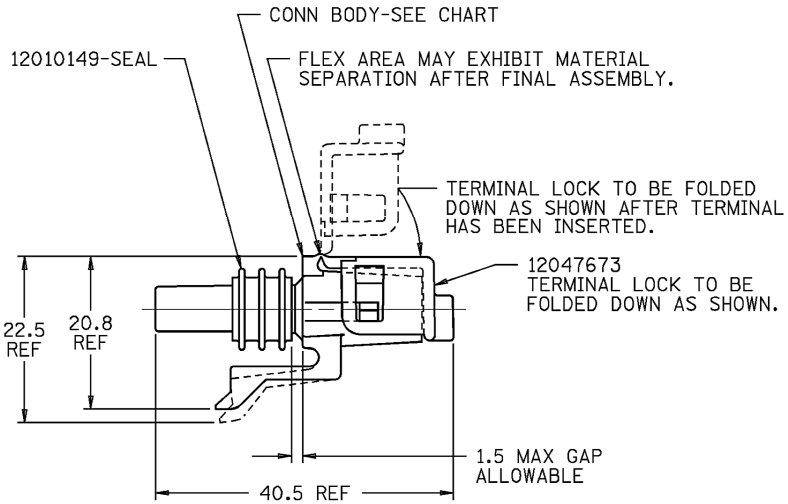

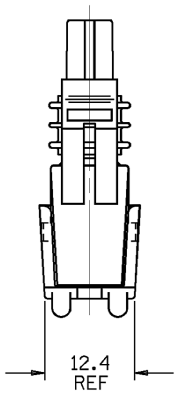

NOTES

1. USE FEMALE TERMINAL 12089188 OR EQUIVALENT FOR 'IN-LINE' APPLICATIONS. USE MALE TERMINAL 12089040 OR EQUIVALENT FOR 'PANEL MOUNT' APPLICATIONS.
2. USE CABLE SEAL 12015323 OR EQUIVALENT.
3. WHEN PARTS ARE SHIPPED, THEY MUST BE PACKED IN PLASTIC BAGS OR SHIPPING CONTAINERS MUST BE LINED WITH PLASTIC LINERS. BAGS OR LINERS MUST BE SEALED TO AVOID ENTRY OF FOREIGN MATTER.
4. SEALING CODE 3.
5. WHEN DESIGNING A PART TO MATE TO THIS WEATHER PACK CONNECTOR, REQUEST THE LATEST COPY OF DRAWING NUMBER 12020084 FROM THE PACKARD ELECTRIC DIVISION.

PART NO.	REV	STATUS	CONN BODY	STANDARD DESCRIPTION	APPLICATION	REF: TERMINAL/GENDER	MATING PART
12077615	A		12077614	ASM CONN 1F W/P TWR	IN-LINE	12089188/FEMALE	12020803
12047673	B		12089583	ASM CONN 1 W/P TWR	BLOCK-OFF	NONE	12010996
12041387	A	OBSOLETE	12041386	ASM CONN 1F W/P TWR	SIR IN-LINE	12089188/FEMALE	———
12015791	A		12015781	ASM CONN 1F W/P TWR	IN-LINE	12089188/FEMALE	12010996

PACKARD ELECTRIC DIVISION
GENERAL MOTORS CORPORATION
WARREN, OHIO

PED/INTERGRAPH EMS

FILE SPEC: $$$$USER$$$$ DGN$SPECIFICATION$$$$$$$$$$$$ $$$$$SYTIME$$$$$$

THIRD ANGLE PROJECTION

METRIC
DIMENSIONS ARE IN MILLIMETERS UNLESS OTHERWISE SPECIFIED.

CODE NO. 6900

Q.C.-C-5110

TOLERANCE UNLESS OTHERWISE SPECIFIED
DECIMAL: ONE PLACE ±0.3, TWO PLACE ±0.15
ANGULAR ±2°

DWG. DATE 01JL87 | SCALE NONE

DR. D.KASHIEN 01JL87
CK. D.STEELE DATE 14JL87
APPR. R.J.CANNATTI DATE 16JL87
APPR. DATE

EST. NO.
REFERENCE NO.

MATERIAL SPEC. SEE DRAWING

NAME ASM CONN 1 W/P TWR

PART NO. 1207 7616

SIZE C