SYMBOL DEFINITION			MISSING SYMBOLS
A DIMENSION WITHOUT AN INSPECTION REPORT SYMBOL ( ) DOES NOT REQUIRE INSPECTION. IT MAY BE CONTROLLED ON THE INDIVIDUAL COMPONENT DRAWING.	TOTAL NO OF INSPECTIONS REQUIRED	65	NO MISSING SYMBOL NUMBER
	LAST NO. USED	56	

DWG STATUS					ZONE	REVISION HISTORY	AUTH	DR	APVD 1	APVD 2
DATE	STG	REV	N/P	CHG						
03JN04	R	01	-	-		CLEARED REVISION COLUMN & REDRAWN TO PD; 15496460 - RELEASED	255443	ECB	AUG	LN

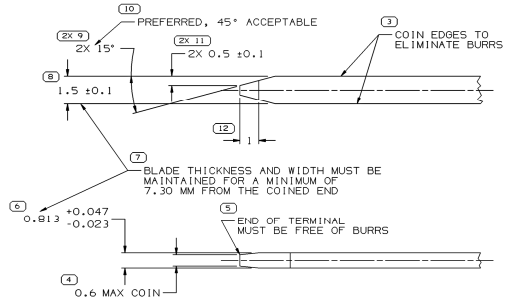

MATERIAL SPECIFICATIONS

RECOMMENDED

BASE METAL - CDA-210, GILDING, EXTRA SPRING TEMPER
PLATING - 0.0050±0.0025 MM THICK TIN

MINIMUMS

ELECTRICAL CONDUCTIVITY - > 20% IACS ± 20°C. USE OF A MATERIAL WITH CONDUCTIVITY < 20% IACS MUST BE APPROVED BY PACKARD ELECTRIC MATERIALS ENGINEERING.

TENSILE STRENGTH - 407 MPa

PLATING - FOR LOW ENERGY (< 5v) AND NON-PASSENGER COMPARTMENT POWER CIRCUITS, 0.0050±0.0025MM THICK TIN. FOR MATERIALS CONTAINING 10% OR MORE ZINC, AN UNDERPLATE OF COPPER 0.0050±0.0025 MM THICK IS REQUIRED.

MATING BLADE INFORMATION

SCALE 10:1
INSPECTION SYMBOLS SHOWN IN THESE VIEWS ARE FOR REFERENCE ONLY

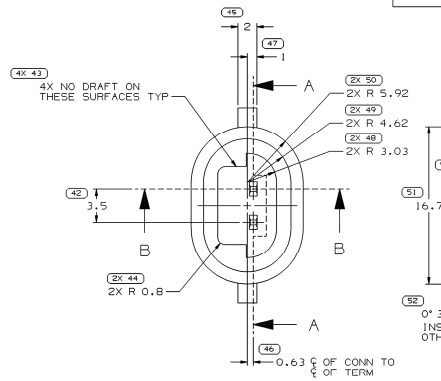

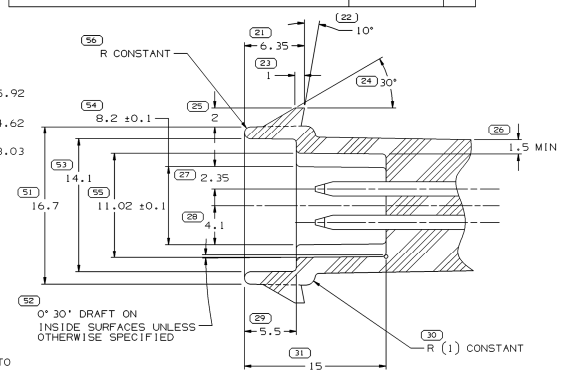

SECTION A-A

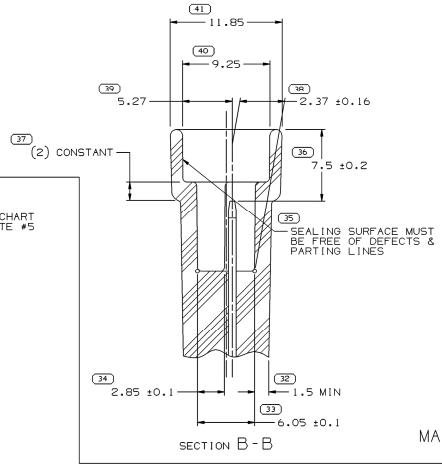

SECTION B-B

NOTES

1. UNLESS OTHERWISE SPECIFIED AND/OR INDICATED:
   DIMENSIONS ARE TO FACE OF VIEW SHOWN AND AUTOMATICALLY ROUNDED BY COMPUTER FOR INSPECTION (SEE MATH MODEL FOR PRECISE DIMENSIONS). FOR ALL OTHER DIMENSIONS NOT SHOWN BUT REQUIRED FOR TOOL BUILD, SEE MATH MODEL FOR PRECISE TOOL PATH DATA.
   ALL RADII 0.4
   DRAFT IS 1° ON ALL SURFACES
2. TERMINALS MUST WITHSTAND A MINIMUM PUSHOUT FORCE OF 67 NEWTONS.
3. WHEN USING THIS INFORMATION FOR A NEW DESIGN, REQUEST THE LATEST COPY OF THIS PRINT FROM PACKARD ELECTRIC DIVISION.

RECOMMENDED MATERIAL:

GLASS REINFORCED NYLON OR POLYESTER.

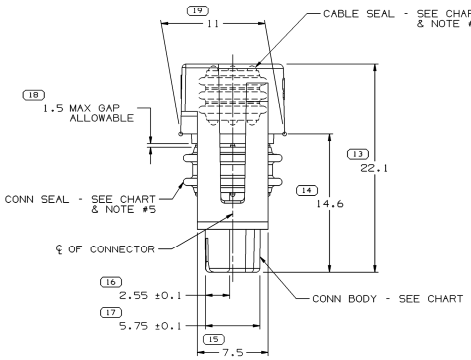

MATING CONNECTOR INFORMATION

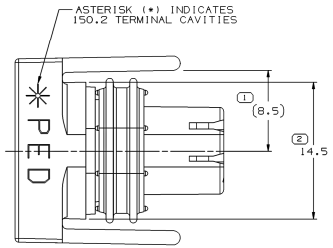

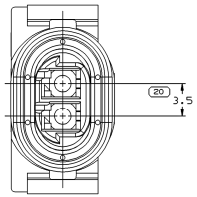

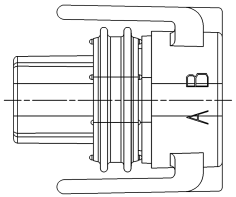

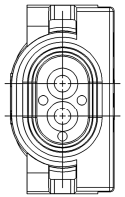

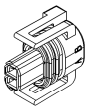

VIEW SCALE DOES NOT REFLECT ACTUAL PART SIZE

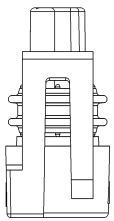

NOTES

1. UNLESS OTHERWISE SPECIFIED AND/OR INDICATED:
   DIMENSIONS ARE TO FACE OF VIEW SHOWN AND AUTOMATICALLY ROUNDED BY COMPUTER FOR INSPECTION (SEE MATH MODEL FOR PRECISE DIMENSIONS). FOR ALL OTHER DIMENSIONS NOT SHOWN BUT REQUIRED FOR TOOL BUILD, SEE MATH MODEL FOR PRECISE TOOL PATH DATA.
2. REFERENCE MATING COMPONENTS OR EQUIVALENT:
   TERMINAL 12124075
   THROTTLE BODY INJECTOR
3. WHEN PARTS ARE SHIPPED, THEY MUST BE PACKED IN PLASTIC BAGS OR SHIPPING CONTAINERS MUST BE LINED WITH PLASTIC LINERS. BAGS OR LINERS MUST BE SEALED TO AVOID ENTRY OF FOREIGN MATTER.
4. USE 10 ML PER 1,000 SEALS OF S-60-T LUBEWELL AT 10:1 CONCENTRATION FOR ASSEMBLY OF CABLE SEALS ONLY.
5. FOR LEAD LENGTH CALCULATIONS, DISTANCE FROM MATING END OF CONNECTOR TO FRONT OF CABLE CORE IS 10.15/7.05.

NOTES	PART NO	REV	N/P	STATUS	CONN	CONN SEAL	CABLE SEAL & COLOR
	15496460	01	-		12162207	12092580	12092579 - RUST ORANGE
	12162218	A	-		12162214	12065812	12084429 - YELLOW
4	12162217	A	-		12162214	12052888	12084421 - GRAY
	12162216	A	-		12162214	12065812	12065799 - LT GRAY
4	12162215	A	-		12162214	12052888	12052889 - BROWN
4	12162208	A	-		12162207	12052888	12052889 - BROWN
4	12162206	A	-		12162205	12052888	12052889 - BROWN
	12162204	A	-		12162203	12092580	12092579 - RUST ORANGE

13 PROCESS SENSITIVE DIMENSION

DIMENSIONS ENCLOSED IN ( ) INDICATE REFERENCE DIMENSIONS AND NO TOLERANCE LIMITS ARE ESTABLISHED

R 0.1 MAX
R 0.2 MAX
SHARP CORNER TOLERANCE

DIMENSIONAL RANGE (MM)										
FROM	> 0	> 20	> 30	> 70	>100	>150	>200	>250	>300
TO	20	30	70	100	150	200	250	300	400
TOLERANCE UNLESS OTHERWISE SPECIFIED									
±0.15	±0.2	±0.3	±0.4	±0.5	±0.6	±0.8	±1	±1.5	
ANGULAR TOLERANCE ±2°									

CHART E1

DWG TYPE: PART DRAWING
STYLE
VOLUME (CM³)
DISTR CODE
ROUTING: 6900

UNLESS OTHERWISE SPECIFIED
THIS DOCUMENT IS IN ACCORDANCE WITH ASME Y14.5M-1994 AS AMENDED BY THE SM BLOCKS STANDARDIZING AND TOLERANCING ADDENDUM-2001. SEPARATE PATTERNS OF FEATURES MAY BE GAGED SEPARATELY REGARDLESS OF DATUM REFERENCES.

ALL DIMENSIONS ARE IN MILLIMETERS

REFERENCE

THIRD ANGLE PROJECTION

DO NOT SCALE
USE MATH DATA

DELPHI
DELPHI PACKARD ELECTRIC SYSTEMS
WARREN, OH

		DATE
DR		
APVD1	J. COLDSNOW	07FE94
APVD2	J. COLDSNOW	07FE94
APVD3	S.J. VUKMER	15FE94
APVD4		
APVD5		

SUBSTANCES OF CONCERN AND RECYCLED CONTENT PER DELPHI [094900]

MATERIAL: SEE DRAWING

DRAWING NAME: AMS CONN 2F M/P 150.2 P2S

DRAWING NUMBER: 12162267

SIZE	SCALE	FRAME NO	SHEET NO	STG	REV	N/P
A0	5:1	1 OF 1	1 OF 1	R	01	-