SYMBOL DEFINITION			MISSING SYMBOL
A DIMENSION WITHOUT AN INSPECTION REPORT SYMBOL ( ) DOES NOT REQUIRE INSPECTION. IT MAY BE CONTROLLED ON THE INDIVIDUAL COMPONENT DRAWING.	TOTAL NO OF INSPECTIONS REQUIRED	106	NO MISSING SYMBOL NUMBER
	LAST NO. USED	76	

KEY PRODUCT CHARACTERISTICS			
SAFETY/COMPLIANCE	FIT/FUNCTION	TOTAL ON DRAWING	3
S/C CHECKPOINTS	F/F CHECKPOINTS	LAST NO. USED	3

NO & TYPE	DESCRIPTION	RATIONALE	PTS	ZONE

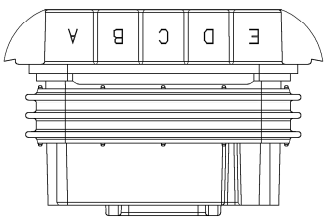

OPTIONAL CONSTRUCTION
FOR 10 WAY

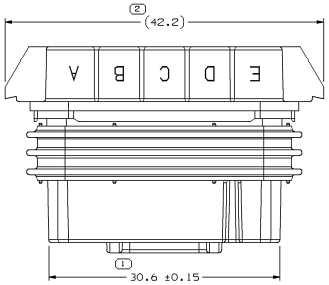

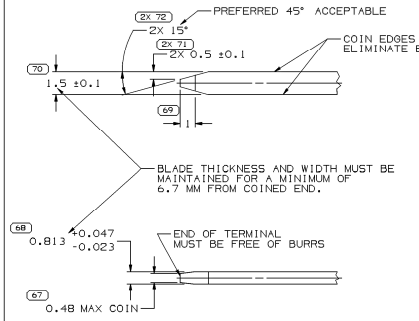

NOTE: TERMINALS ARE IDENTICAL

MATERIAL SPECIFICATIONS

RECOMMENDED

BASE METAL - CDA-210, GILDING, EXTRA SPRING TEMPER

PLATING - 0.0050±0.0025 MM THICK TIN

MINIMUMS

ELECTRICAL CONDUCTIVITY - ≥ 20% IACS AT 20°C. USE OF A MATERIAL WITH CONDUCTIVITY < 20%IACS MUST BE APPROVED BY PACKARD ELECTRIC MATERIALS ENGINEERING.

TENSILE STRENGTH - 407 MPa

PLATING - FOR LOW ENERGY (≤ 5v) AND NON-PASSENGER COMPARTMENT POWER CIRCUITS, 0.0050±0.0025 MM THICK TIN. FOR MATERIALS CONTAINING 10% OR MORE ZINC, AN UNDERPLATE OF COPPER 0.0050±0.0025 MM THICK IS REQUIRED.

MATING BLADE INFORMATION

SCALE 8:1

INSPECTION SYMBOLS SHOWN IN THIS VIEW ARE FOR REFERENCE ONLY

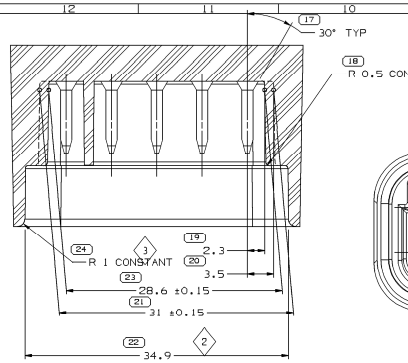

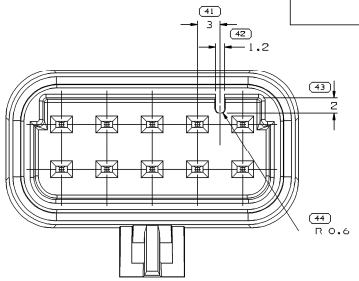

TYPE 102
SAME AS TYPE 101
EXCEPT AS SHOWN

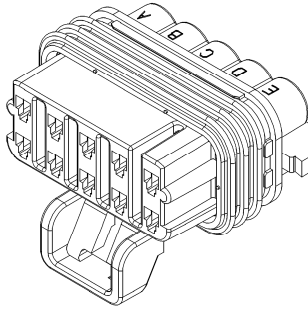

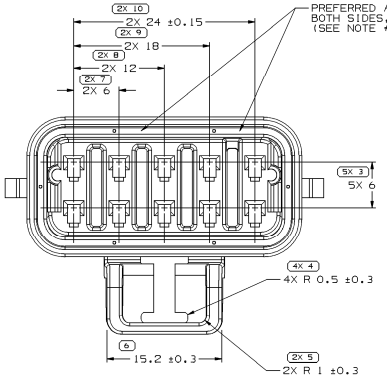

TYPE 101
10 WAY

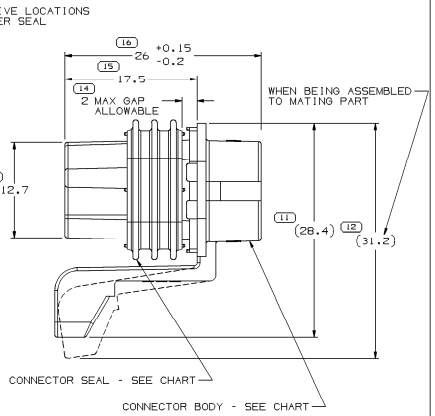

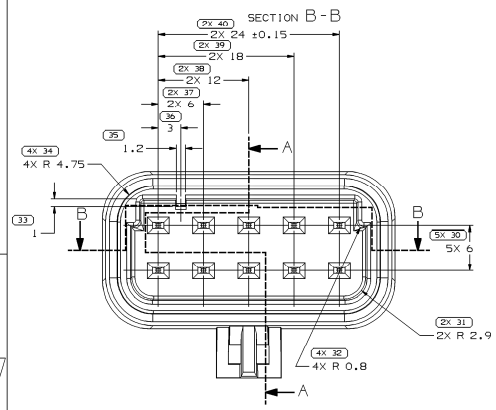

TYPE 101 & 103

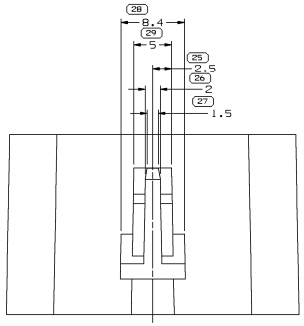

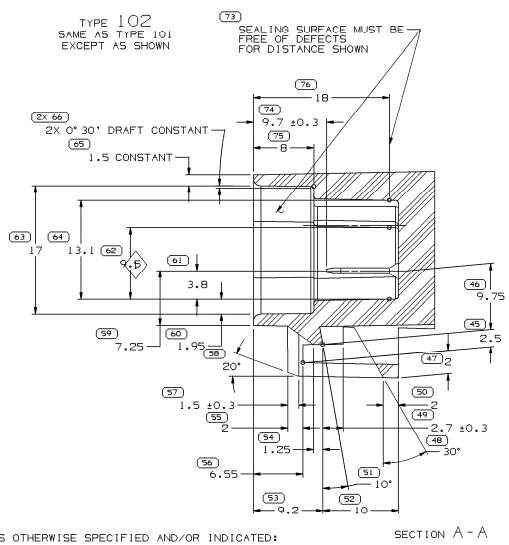

NOTES

1. UNLESS OTHERWISE SPECIFIED AND/OR INDICATED:

   DIMENSIONS ARE TO FACE OF VIEW SHOWN AND AUTOMATICALLY ROUNDED BY COMPUTER FOR INSPECTION (SEE MATH MODEL FOR PRECISE DIMENSIONS). FOR ALL OTHER DIMENSIONS NOT SHOWN BUT REQUIRED FOR TOOL BUILD, SEE MATH MODEL FOR PRECISE TOOL PATH DATA.
   ALL RADII 0.4
   DRAFT IS 1° ON ALL OUTSIDE SURFACES

2. RECOMMENDED MATERIAL: GLASS FILLED NYLON OR POLYESTER

3. TERMINAL MUST WITHSTAND A MINIMUM PUSHOUT FORCE OF 89 N (20 LBS)

4. WHEN USING THIS INFORMATION FOR A NEW DESIGN REQUEST THE LATEST COPY OF THIS PRINT FROM PACKARD ELECTRIC

5. KEY PRODUCT CHARACTERISTIC SYMBOLS (◇,⊗) INDICATE PRODUCT CHARACTERISTICS THAT REQUIRE SPECIAL CARE, DOCUMENTATION, AND ACCEPTANCE CRITERIA PER GM 1805 QN AND DELPHI PACKARD ELECTRIC SYSTEMS PROCEDURES.

MATING PART INFORMATION

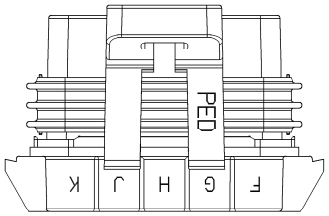

BODY TYPE II
SAME AS BODY TYPE I
EXCEPT WITH ANTI-BUNCHING
LIPS ON SHORT ENDS OF CONN
(REF CONN PRINT 12045809)

NOTES

1. UNLESS OTHERWISE SPECIFIED AND/OR INDICATED:

   DIMENSIONS ARE TO FACE OF VIEW SHOWN AND AUTOMATICALLY ROUNDED BY COMPUTER FOR INSPECTION (SEE MATH MODEL FOR PRECISE DIMENSIONS). FOR ALL OTHER DIMENSIONS NOT SHOWN BUT REQUIRED FOR TOOL BUILD, SEE MATH MODEL FOR PRECISE TOOL PATH DATA.

2. CONN & SEAL ASM-TO ACCEPT 2.5 MAX DIA CABLE

3. CAVITIES TO ACCEPT 12048074 TERMINAL OR EQUIVALENT

4. THIS ASSEMBLY TO ACCEPT CABLE SEAL 12048086 OR EQUIVALENT

5. SHIP IN PLASTIC BAGS OR SHIPPING CONTAINERS LINED WITH PLASTIC LINER BAG OR LINER TO BE SEALED TO PREVENT ENTRY OF FOREIGN MATTER

6. THIS PART IS NOT CONTROLLED FOR AUTOMATIC FEEDING

7. CONNECTOR ACCEPTS CPA 12020833
   TPA 12177082

8. SEALING CODE #3

9. FOR PART NUMBERS WITH ADHESIVE, USE M3510001 OR ADHESIVE APPROVED BY MATERIALS ENGINEERING TO GLUE CONNECTOR SEAL TO CONNECTOR

10. MINIMUM RETENTION OF PERIPHERAL SEAL TO CONNECTOR IS 4.1 N

11. CONNECTOR TO ACCEPT CAP/COVER 12129589

PART NO. WITH ADHESIVE	REV	N/P	PART NO. WITHOUT ADHESIVE	REV	N/P	NO. OF CAVITIES	CAVITIES BLOCKED	PART NO (CONNECTOR BODY)	COLOR (CONNECTOR BODY)	PART NO (CONNECTOR SEAL)	MATING CONNECTOR	NOTES	INDEX TYPE	REPLACED BY	
-	-	-	12160397	C3	-	5	F,G,H,J,K	12160396	LT GREEN	12077436	12045808	1-8	101	-	
-	-	-	12124012	E4	-	6	D,E,G,K	12124016	BROWN	12077436	A.B.S. MODULE	1-8	103	-	
-	-	-	12110073	D5	-	7	E,K,G	12110074	CREAM	12077436	12045808	1-8	101	-	
-	-	-	12089888	B	-	10	NONE	12045809	BLK	12077436	12045808	1-10	101	12065425	
-	-	-	12084380	C4	-	8	G,H	12084381	LT GRAY	12077436	12045808, AC MOD	1-8	101	-	
-	-	-	12065462	A	-	7	G,H,J	12052934	BLUE	12047939	AC CRUISE MODULE	1-8	101	-	
-	-	-	12065461	A	-	10	NONE	12052190	MED GRAY	12047939	12052189	1-8	102	-	
-	-	-	12065460	A	-	10	NONE	12045809	BLK	12047939	12045808	1-8	101	-	— BODY TYPE II
-	-	-	12065427	D4	-	7	G,H,J	12052934	BLUE	12077436	12045808, AC MOD	1-8	101	-	
-	-	-	12065426	D3	-	10	NONE	12052190	MED GRAY	12077436	12052189	1-8	102	-	
12186688	B2	-	12065425	E3	-	10	NONE	12045809	BLK	12077436	12045808	1-8	101		— BODY TYPE- II
-	-	-	12059228	A	-	7	G,H,J	12052934	BLUE	12045811	AC CRUISE MODULE	1-8	101	12065427	
-	-	-	12052420	A	-	10	NONE	12052190	MED GRAY	12045811	12052189	1-8	102	12065426	
-	-	-	12045812	A	-	10	NONE	12045809	BLK	12045811	12045808	1-8	101	12065425	

DRAWING NUMBER						
12048226						
SIZE	SCALE	FRAME NO	SHEET NO	STB	REV	N/P
A1x3	4:1	2 OF 2	1 OF 1	R	04	-

(N/A) PROCESS SENSITIVE DIM

DIMENSIONS ENCLOSED IN ( ) INDICATE REFERENCE DIMENSION AND NO TOLERANCE IS REQUIRED

DIMENSIONAL RANGE (MM)															
FROM	>0	>20	>30	>70	>100	>150	>200	>250							
TO	20	30	70	100	150	200	250	300							
TOLERANCE UNLESS OTHERWISE SPECIFIED															
±0.15	±0.2	±0.3	±0.4	±0.5	±0.6	±0.8	±1								
ANGULAR TOLERANCE ±2°															