THIS DRAWING IS UNPUBLISHED. RELEASED FOR PUBLICATION 2009
© COPYRIGHT 2009 BY TYCO ELECTRONICS CORPORATION, ALL RIGHTS RESERVED.

MATED WITH: PASSEND ZU: -

| LOC | DIST |
|---|---|
| A1 | - |

PROJEKT NR.: -

REVISIONS

| P | LTR | DESCRIPTION | DATE | DWN | APVD |
|---|---|---|---|---|---|
| | A1 | 1703013-2 und/AND 1703017-2 hinzugefuegt/ADDED | 24FEB2004 | Abr | C.G. |
| | A2 | Ausfuehrg. je nach Wkzg./VARIANT DEPENDS ON TOOLING | 12APR2005 | Abr | C.G. |
| | A3 | 1703013-8, und/AND NOTE 3 hinzugefuegt/ADDED | 17OCT2005 | K.F. | C.G. |
| | A5 | NEW PROE DRAWING CREATED ECR-10-007842 | 12APR2010 | Frue | Goe |

REMARKS
Bemerkungen

1. PRE TINNED 1-3 µm
vorverzinnt

2. FINISH: ELECTROPLATED SILVER
Oberflaeche: galvanisch versilbert

ZONE "A": MIN. 3-5 µm Ag
min. 3-5 µm Ag

ZONE "B": MIN. 1-3 µm ELECTROPLATED SN
min. 1-3 µm galvanisch Sn

REST: SILVER OR TIN ALLOWED. IN TRANSITION AREAS OVERLAPPING LAYER OR PLAIN SURFACES ARE NOT ALLOWED.
Silber oder Zinn erlaubt. Im Uebergangsbereich sind keine ueberlappenden Schichten oder blanke Stellen erlaubt.

3. FINISH: ELECTROPLATED GOLD
Oberflaeche: galvanisch vergoldet

ZONE "A": MIN 0.8 µm ELECTROPLATED Au OVER MIN 1.3 µm ELECTROPLATED Ni LAYER
min 0.8 µm galvanisch Au ueber min 1.3 µm galvanisch Ni

ZONE "B": MIN 1-2 µm ELECTROPLATED SN OVER MIN 0.05 µm ELECTROPLATED Ni LAYER
min 1-2 µm galvanisch Sn ueber min 0.05 µm galvanisch Ni

REST: GOLD, TIN OR NICKEL SURFACE. NO PLAIN SURFACES ALLOWED
Gold, Zinn ober Nickel Oberflaeche. Keine blanke Stellen erlaubt.

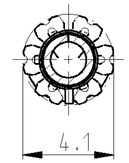


SECTION C-C
Schnitt

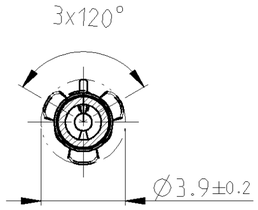


SECTION D-D
Schnitt

SECTION A-A
Schnitt A-A

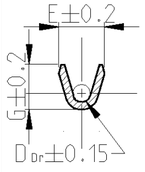


SECTION B-B
Schnitt B-B

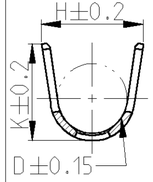

2:1

SECTION E-E
Schnitt

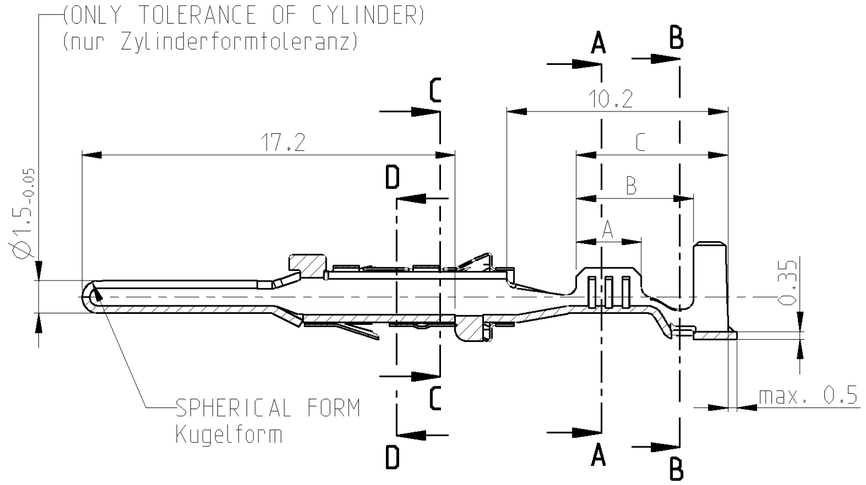


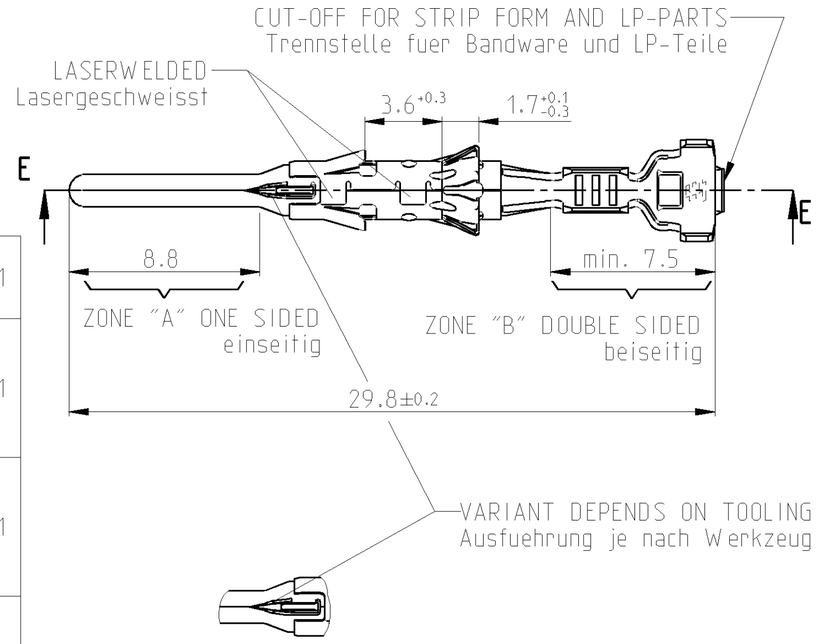


| TE ORDER-No. STRIP FORM Bandware | TE ORDER-No. LOOSE PIECE. Einzelausfuehrung | REV. | MATERIAL Werkstoff | SURFACE Oberflaeche | DGB [mm²] | ISOL.Ø [mm] | WIRE CRIMP Drahtcrimp | INSUL.-CRIMP Isol.-Crimp | A | B | C | TE ORDER-No. SINGLE SEAL Einzeldichtung | TE ORDER-No. DEAD END PLUG Blindstopfen |
|---|---|---|---|---|---|---|---|---|---|---|---|---|---|
| | | | | | | | CRIMP DIMENSION (mm) Crimpabmessungen (mm) | | | | | | |
| 1703014-4 | 1703018-4 | A | CuFe2 | 1 | >1.0-2.5 FLR | 2.2-3.0 | E=3.6 G=3.8 DDr=1.7 | H=5.0 K=5.0 D=3.6 | 4 | 6.9 | 8.5 | 828905-1 | 828922-1 |
| 1703014-1 | 1703018-1 | A | CuNiSi | 1 | | | | | | | | | |
| 1703013-8 | | A | CuNiSi | 3 | 0.5-1.0 FLR | 1.2-2.1 | E=2.6 G=2.8 DDr=1.1 | H=4.8 K=4.8 D=3.2 | 3 | 5.4 | 7 | 828904-1 | 828922-1 |
| 1703013-4 | 1703017-4 | A | CuFe2 | 1 | | | | | | | | | |
| 1703013-2 | 1703017-2 | A | CuNiSi | 2 | | | | | | | | | |
| 1703013-1 | 1703017-1 | A | | 1 | | | | | | | | | |
| 1703012-4 | 1703016-4 | A | CuFe2 | 1 | 0.2-0.4 FLR | 1.2-2.1 | E=2.1 G=2.1 DDr=0.8 | H=4.7 K=4.5 D=3.2 | 3 | 5.4 | 7 | 828904-1 | 828922-1 |
| | | | CuNiSi | | | | | | | | | | |
| | | | | | | | | | | | | | |
| 1703012-1 | 1703016-1 | A | | 1 | | | | | | | | | |

THIS DRAWING IS A CONTROLLED DOCUMENT FOR TYCO ELECTRONICS CORPORATION IT IS SUBJECT TO CHANGE AND THE CONTROLLING ENGINEERING ORGANIZATION SHOULD BE CONTACTED FOR THE LATEST REVISION.

DIMENSIONS: mm

TOLERANCES UNLESS OTHERWISE SPECIFIED:
0 PLC ±0.15
1 PLC ±-
2 PLC ±-
3 PLC ±-
4 PLC ±-
ANGLES ±2°

MATERIAL -
FINISH -

DWN Abraham.G. 04FEB2004
CHK Goeppel.C. 05FEB2004
APVD Bleicher.M. 05FEB2004
PRODUCT SPEC 108-18028
APPLICATION SPEC 114-18040
WEIGHT 0.5g

Tyco Electronics
Tyco Electronics AMP GmbH
64625 Bensheim

NAME
DIA 1.5mm CONTACT-PIN, ASSY FOR SINGLE WIRE SEALING
Ø1.5mm Kontaktstift, Einzeldichtungssystem

SIZE A2 | CAGE CODE 00779 | DRAWING NO C-1703020 | RESTRICTED TO -

CUSTOMER DRAWING | SCALE 5:1 | SHEET 1 OF 1 | REV A5