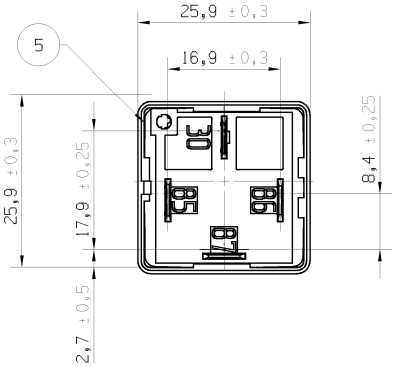

CIRCUIT DIAGRAM

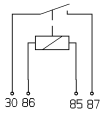

Dustproof:
Protection class IP 54 To IEC 529 (EN 60529)
Terminals shape similar to ISO 8092-1
Coil and Load Terminals 6.3 x 0.8 mm

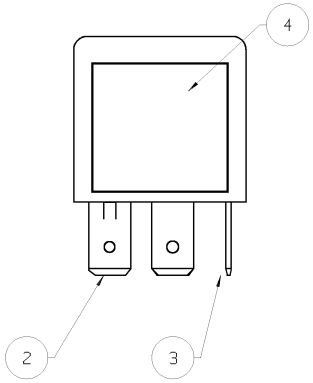

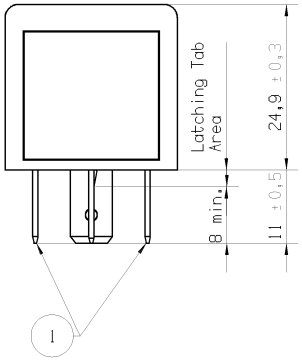

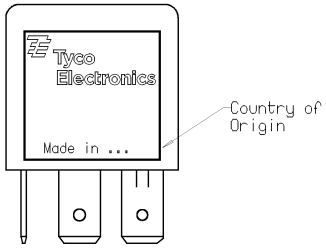

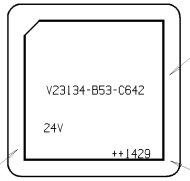

No.	PART	MATERIAL	COLOUR
5	Base	PA 66 GF 25	Black sim. to RAL 9005
4	Cover	PA 66 GF 25	Black sim. to RAL 9005
3	Load terminal (87)	E-Cu	Pre-tinned Sn
2	Load Terminal (30)	E-Cu	Pre-tinned Sn
1	Coil terminals (85) and (86)	CuSn	Pre-tinned Sn

TE P/N	REV	PART NUMBER	COUNTRY OF ORIGIN
1393303-9		V23134-B0053-C642	PORTUGAL
7-1904094-5			CHINA

PROPRIETARY
THE REPRODUCTION, TRANSMISSION OR USE OF THIS DOCUMENT OR IT'S CONTENTS IS NOT PERMITTED WITHOUT EXPRESSED WRITTEN AUTHORITY. OFFENDERS WILL BE LIABLE FOR ALL DAMAGES. ALL RIGHTS, INCLUDING RIGHTS CREATED BY REGISTERED PATENT(S) GRANTED FOR A UTILITY MODEL OR DESIGN, ARE RESERVED.

CHANGES TO THIS DRAWING MUST BE DONE ONLY IN CAD

PAPER SIZE: A2

APPLICABLE SPEC.:

FINISH

DIMENSIONS APPLY PLATING

TOLERANCE UNLESS SPECIFIED OTHERWISE

DIMENSIONS IN MM

SCALE 2:1

WEIGHT

MATERIAL

	DATE	NAME
DWN.	04SEP2014	L.Sandoval
APP.		
REV.		
LOCATION	PE Evora	

PART NAME

POWER F Relay
NO 40A 24V

PART NO.

V23134-B0053-C642

SHT. 1 OF 1

REV.	CHANGE ORDER	DATE	APP.
A	Initial Drawing	04SEP2014	LSand

CLASS 3

CUSTOMER DRAWING