THIS DRAWING IS UNPUBLISHED. RELEASED FOR PUBLICATION FEB ,2006.
© COPYRIGHT 2006 By – ALL RIGHTS RESERVED.

LOC	DIST
E	B

REVISIONS

P	LTR	DESCRIPTION	DATE	DWN	APVD
	D	ECO-14-000688	31JUL2014	RZ	MY

NOTES:

1. PACKAGE ONE COMPLETE CONNECTOR IN HEAT SEALED, LABELED BAG/ 500 PER SHIPPING BOX. LABELED PER TEC-107-115
2. 100 TRAY PACK IN ACCORDANCE WITH AMP SPEC 107-3275
3. Au PLATING
4. HAND TOOL : 9-1478240-0
5. DIE SET : 9-1478248-0
6. ELECTRICAL CHARACTERISTICS

FREQUENCY RANGE:	DC – 6 GHz
NOMINAL IMPEDANCE:	50 Ohm
INSULATION RESISTANCE:	1000 MOhm
WORKING VOLTAGE:	335 Volts RMS at Sea Level
DIELECTRIC WITHSTAND VOLTAGE:	1000 Volts RMS Max
CONTACT RESISTANCE:	
CENTRE CONTACT:	5.00 mOhm Max
OUTER CONTACT:	2.50 mOhm Max
VSWR @ 4GHz:	1.63:1 Max
INSERTION LOSS dB @ x 1.0 GHz:	0.20 Max

7. MECHANICAL CHARACTERISTICS

CABLE RETENTION FORCE:	
"RG178B/U, 196A/U:"	32N Min
DURABILITY:	500 Cycles Min

8. ENVIRONMENTAL CHARACTERISTICS

OPERATING TEMPERATURE:	–65 to +165 DegC

9. FOR TECHNICAL DATA REFER TO YOUR LOCAL TE CONNECTIVITY SALES OFFICE
10. ALL DIMENSIONS ARE NOMINAL FOR REFERENCE ONLY UNLESS OTHERWISE STATED

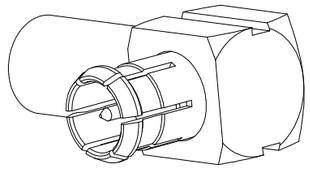

SCALE: NTS

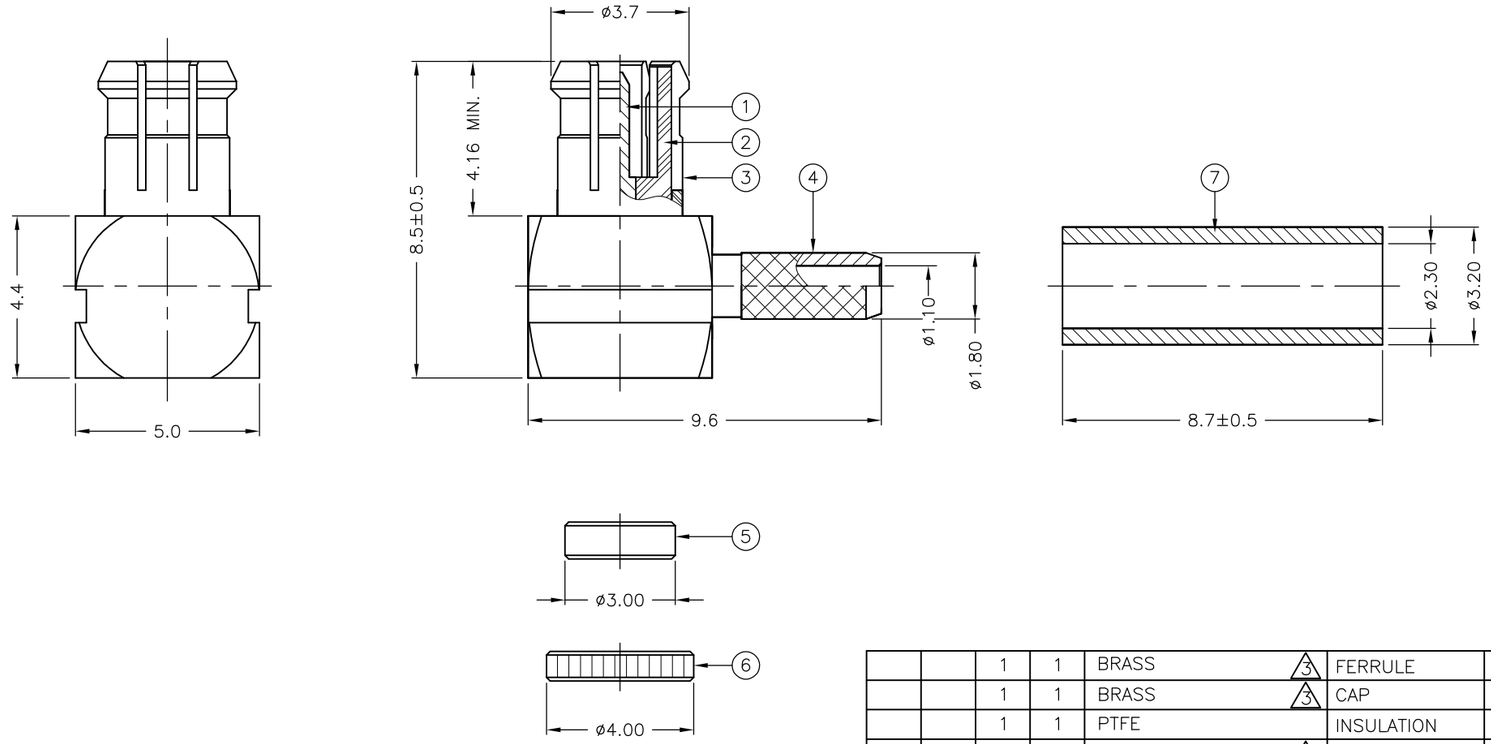

QUANTITY PER ASSY				PARTS LIST		
		6--0	1--0	MATERIAL	DESCRIPTION	ITEM
		2	1			
		1	1	BRASS 3	FERRULE	7
		1	1	BRASS 3	CAP	6
		1	1	PTFE	INSULATION	5
		1	1	BRASS 3	BODY II	4
		1	1	BERYLLIUM COPPER 3	BODY I	3
		1	1	PTFE	INSULATION	2
		1	1	BRASS 3	CONTACT	1

RECOMMENDED CRIMP SLEEVE A/F HEX

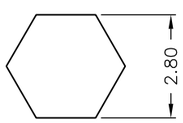

RECOMMENDED CABLE STRIPPING DIM'S

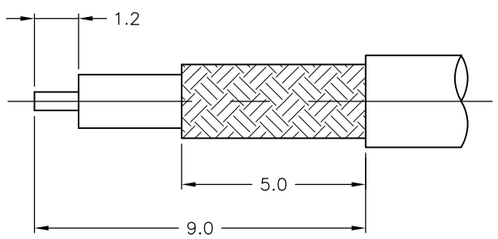

THIS DRAWING IS A CONTROLLED DOCUMENT.

DIMENSIONS: mm

TOLERANCES UNLESS OTHERWISE SPECIFIED:

0 PLC	± –
1 PLC	± 0.2
2 PLC	± 0.1
3 PLC	± –
4 PLC	± –
ANGLES	± –

MATERIAL: SEE TABLE

FINISH: –

DWN	J.SANDWELL	06FEB06
CHK	S.PARLOW	06FEB06
APVD	F.WHEELER-KING	06FEB06
PRODUCT SPEC	108-3640	
APPLICATION SPEC	411-3251	
WEIGHT	–	

TE Connectivity

NAME: MCX ELBOW PLUG CRIMP 50 OHM RG178B/U, 196A/U, URM110 –

SIZE	CAGE CODE	DRAWING NO	RESTRICTED TO
A3	00779	C-1337584	–

CUSTOMER DRAWING

SCALE	SHEET	REV
NTS	1 OF 1	D