REV	
B	1011-344 THRU 349-* *05

REVISIONS			
SYM	DESCRIPTION	DATE	APPROVED
NC	NEW RELEASE PER E.O. P20538	7/9/10	R.D.R.
A	REVISED PER E.O. P20708	12/6/10	R.D.R.
B	REVISED PER E.O. P20813	3/9/11	R.D.R.

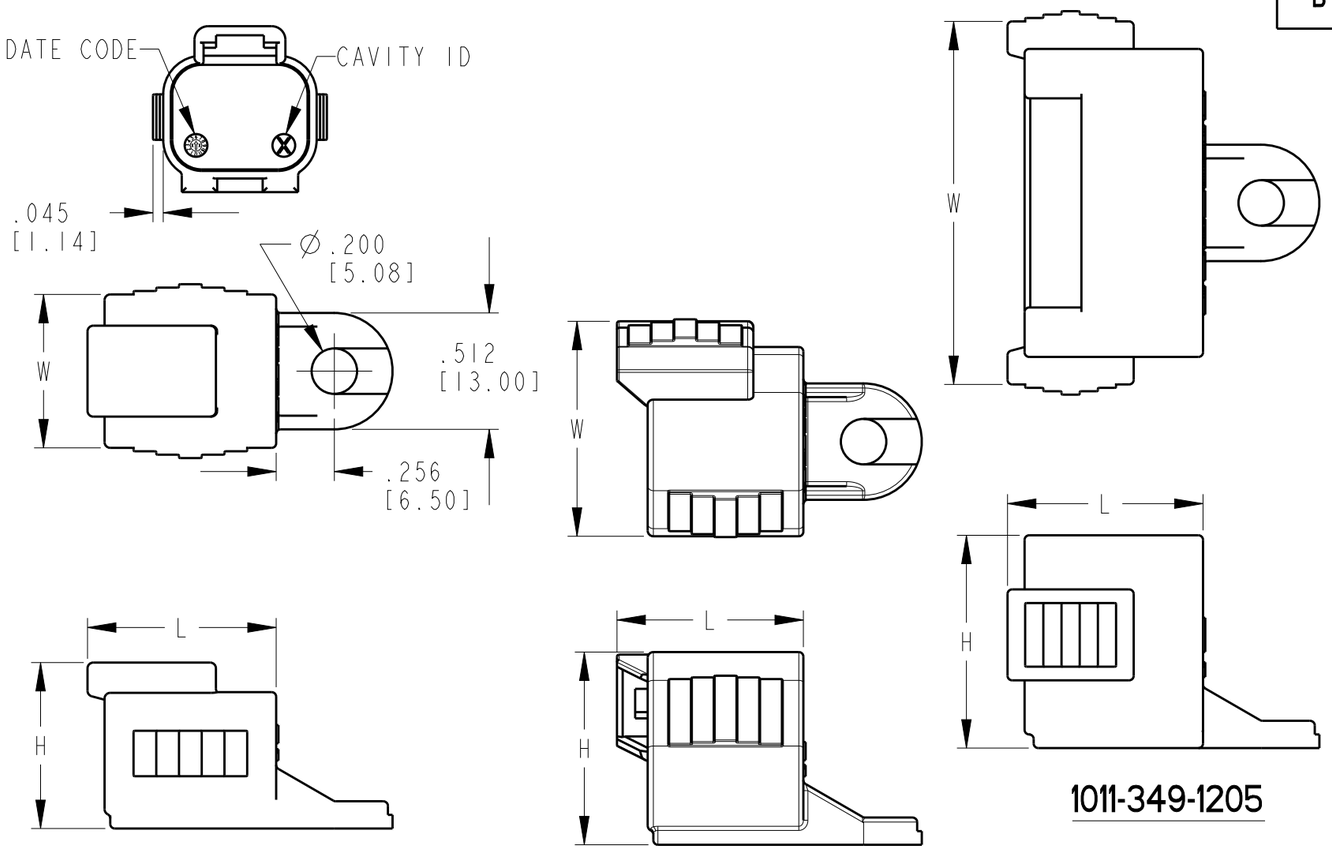

1011-349-1205

CAP DIMENSION TABLE

CONNECTOR	ENVELOPE DIMENSIONS			PART NUMBER
	L	W	H	
DT06-2S	.830 [21.08]	.675 [17.15]	.730 [18.54]	1011-344-0205
DT06-3S	.820 [20.83]	.946 [24.02]	.848 [21.53]	1011-345-0305
DT06-4S	.830 [21.08]	.820 [20.83]	.836 [21.23]	1011-346-0405
DT06-6S	.830 [21.08]	.820 [20.83]	1.011 [25.68]	1011-347-0605
DT06-08S	.870 [22.10]	1.435 [36.45]	.960 [24.38]	1011-348-0805
DT06-12S DT16-15/18S	.860 [21.84]	1.597 [40.56]	.936 [23.77]	1011-349-1205

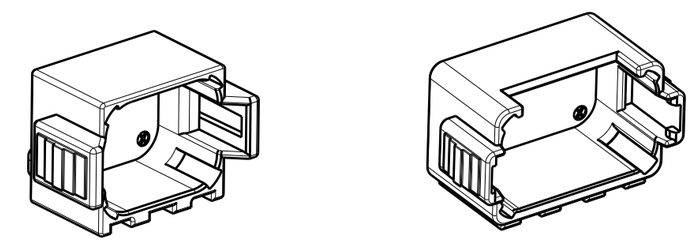

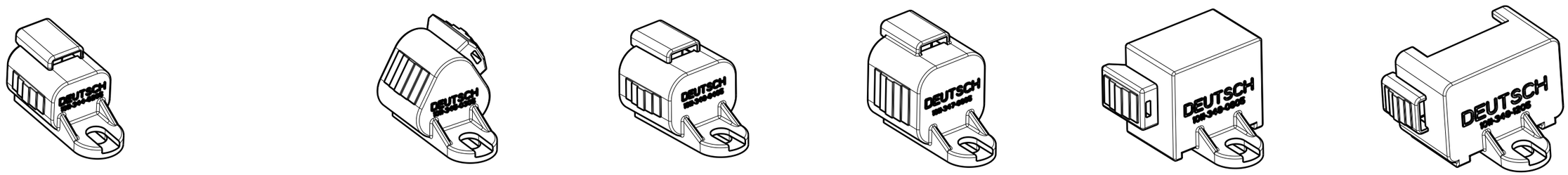

1011-344-0205 1011-345-0305 1011-346-0405 1011-347-0605 1011-348-0805 1011-349-1205

3. MATERIAL: PLASTIC; COLOR: BLACK

2. THESE PARTS MATE WITH DT PLUG CONNECTORS.

1. DIMENSIONS ARE IN INCHES [MILLIMETERS] AND ARE ±.025 [0.63] UNLESS OTHERWISE SPECIFIED.

NOTES:

	SIGNATURE & DATE
DR	R.MESSENGER 6/23/10
CHK	B. BYFORD 3/4/11
PE	R.MESSENGER 2/11/11
APPD	S. BEARD 2/23/11
SCALE NONE	WT ———

2-12 WAY CAPS FOR PLUGS

DT SERIES

ENVELOPE

EP — MATL. CODE

DEUTSCH INDUSTRIAL
3850 INDUSTRIAL AVE.
HEMET, CA 92545

B — DWG SIZE

1011-344 THRU 349-* *05

CODE 4AFU8 — SHEET | OF |