THIS DRAWING IS UNPUBLISHED. RELEASED FOR PUBLICATION JUN,2014 ,- .
© COPYRIGHT 2014 By Tyco Electronics Japan G.K. ALL RIGHTS RESERVED.

LOC	DIST
J	

REVISIONS
変更

P	LTR	DESCRIPTION	DATE	DWN	APVD
	A1	REVISED ECR-14-018935	18DEC14	DM	TK

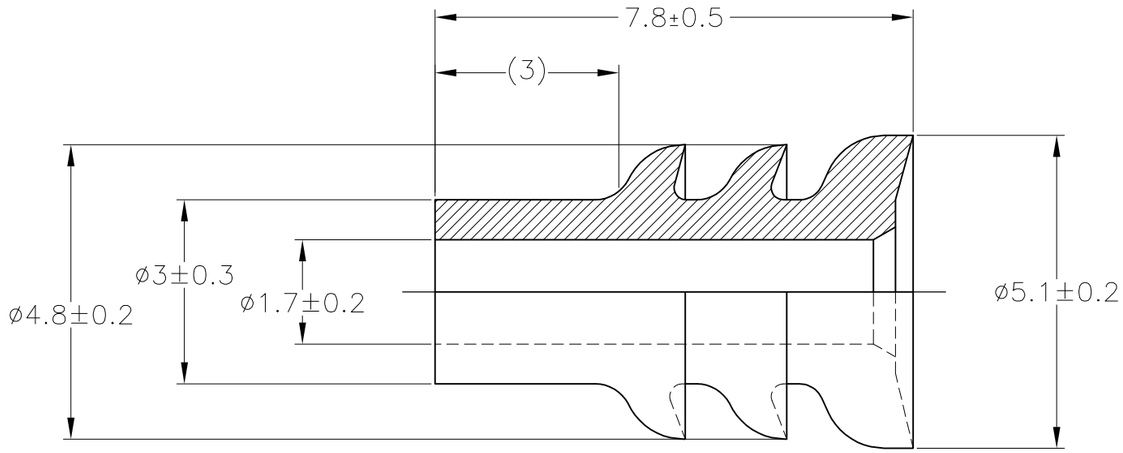

1. オイル塗布タイプ
2. 材料；NBR フタル酸フリー

1. OIL COATED TYPE
2. MATERIAL ; NBR NON-BIS TYPE

MATERIAL	COLOR	PART NUMBER
NBR 2	黒色 (BLACK)	2822354-2
NBR 1 2	黒色 (BLACK)	2822354-1

WIRE RANGE	INSULATION DIA.
0.5～1.25mm² (AWG#20-#16)	ø2～ø2.6mm

THIS DRAWING IS A CONTROLLED DOCUMENT.

DIMENSIONS: 単位： 粍 mm

TOLERANCES UNLESS OTHERWISE SPECIFIED: 一般公差

0 PLC	± –
1 PLC	± –
2 PLC	± –
3 PLC	± –
4 PLC	± –
ANGLES	± –

MATERIAL 材料: SEE TABLE

FINISH 仕上: –

DWN D.MATSUURA 06AUG2014
CHK S.IWATANI 06AUG2014
APVD T.KOHNO 06AUG2014
PRODUCT SPEC 製品規格: 108-5262 108-5179
APPLICATION SPEC 取付適用規格: —
WEIGHT: 0.1 g

TE Connectivity

NAME 名称: 070 TYPE RUBBER PLUG

SIZE	CAGE CODE	DRAWING NO 番号	RESTRICTED TO
A3	00779	C-2822354	—

CUSTOMER DRAWING | SCALE 尺度 10:1 | SHEET 1 OF 1 | REV A1

1470-19 (3/11)