Index	Änderung	Tag	Name
K6	REVISED PER ECR-16-009210	30JAN2017	BW/RS
K7	REVISED PER ECR-18-010208	24JUL2018	BDA/SF

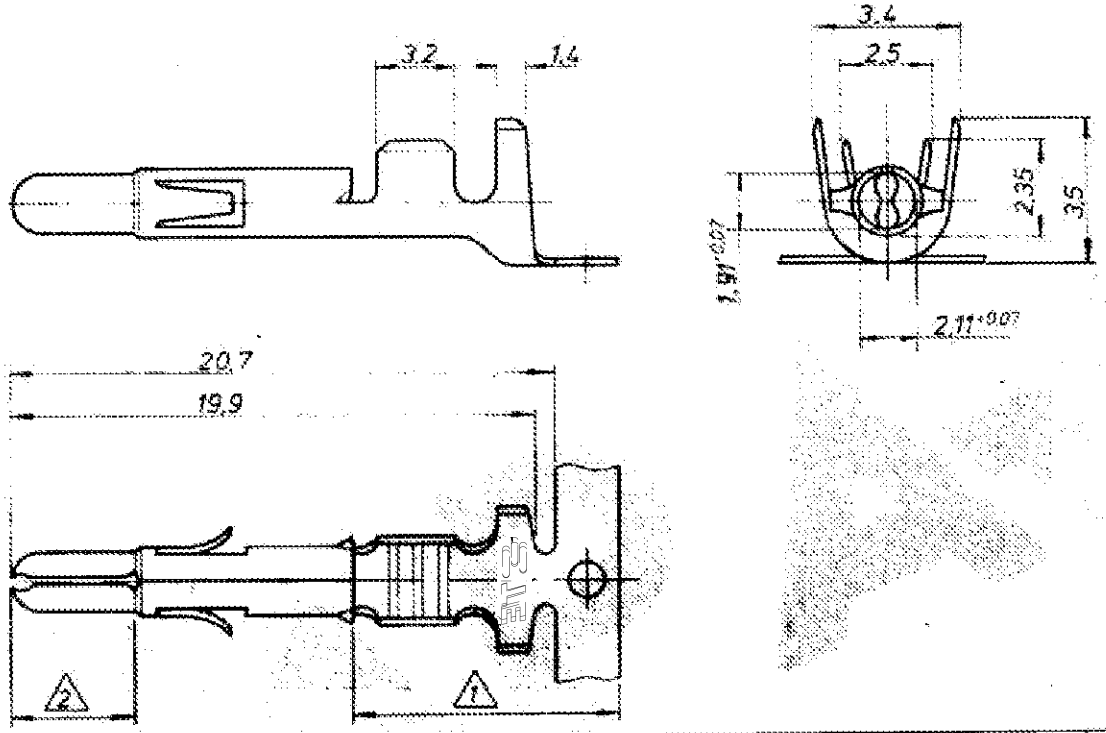

SUPERSEDED BY 350699-7