Part number

CQEM 32

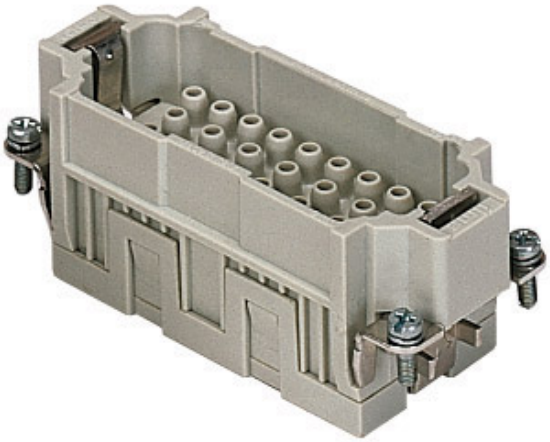

Brief description:

male insert, 32 poles + PE, crimp connections, 16A 500V, 6kV, 3, size "77.27", CLASS insert series

Product description	
Model	male insert
Version	crimp connections
Series	CQE
Product type	for male contacts 16A
Family	CLASS inserts
Size	size "77.27"
N. of poles	32 poles + ⏚
Technical data	
Current	16 A (A.C. and D.C.)
Voltage	500 V
Rated impulse withstand voltage	6kV
Pollution degree	3
Operating temperature range (min, max)	-50°C … +70°C
Mating cycles	≥ 200
IP degree of protection	IP20 without enclosure, IP65/IP66/IP68/IP69 with enclosure
PE wire cross-section	0,14 - 4 mm2; AWG 20 - 12
Further technical details	
Characteristics according to EN 61984	16A 500V 6kV 3; 16A 830V 8kV 2
Insulation resistance	≥ 1 GΩ
Rated voltage according to UL/CSA	600V
UL 94 flammability rating	V-0
Weight	57,00 g

Approvals / Standards	
Reference standard	EN 61984:2009-06
Quality mark	, EAC
Conformity	CQC, CE
General ordering information	
EAN13 code	8015747037204
Tariff number	85369095
Country of origin	Made in EU (IT)
ETIM classification	EC000438
Packaging Information	
Packaging length	210,00 mm
Packaging height	130,00 mm
Packaging width	240,00 mm
Packaging weight	2,08 kg
Packaging volume	6,55 dm³
Packaging description	Carton box
Packaging quantity	30 Pcs
Packaging EAN code	8015747208826
Sub-packaging weight	0,35 kg
Sub-packaging description	Carton tray
Sub-packaging quantity	5 Pcs
Sub-packaging EAN barcode	8015747037211

Part number

CQEM 32

Catalogue drawings

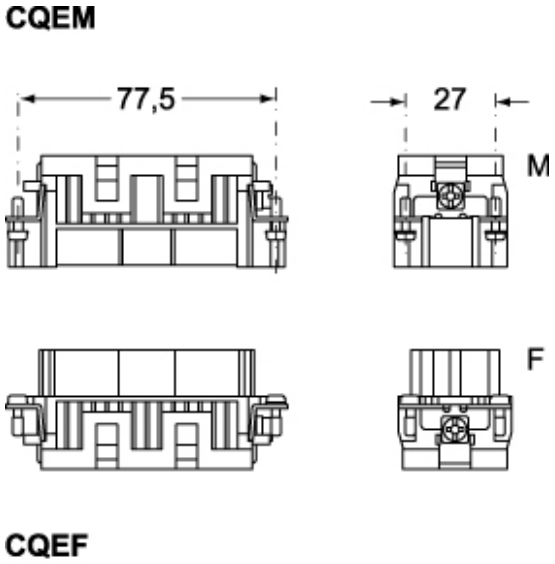

Catalogue drawings

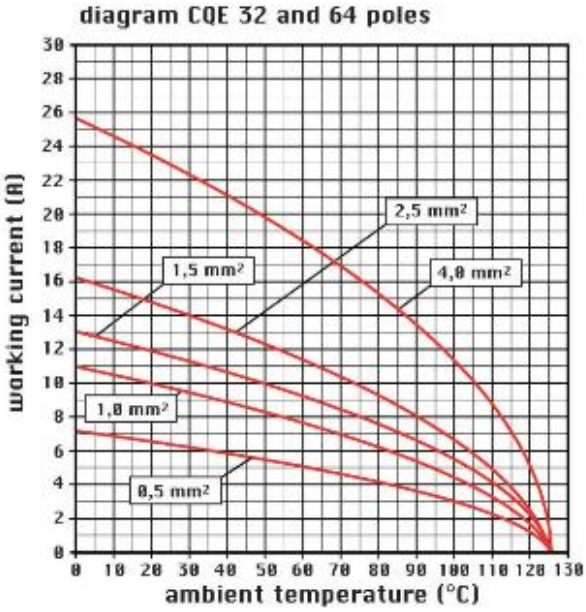

Notes

CQEF/M 32 inserts:

- characteristics according to EN 61984:
(16A 500V 6kV 3)
(16A 830V) 8kV 2)
- rated voltage according to UL/CSA: 600V
- insulation resistance: > 10 GOhm
- ambient temperature limit: -40 °C ... +125 °C
- are made of self-extinguishing thermoplastic resin
UL 94 V0
- mechanical life: > 500 cycles
- contact resistance: < 1 mOhm
- for contact crimping instructions, please see the crimping tool section (16A contacts, CCF, CCM and CC...AN series) .
- enclosures:size "77.27":
C-TYPE IP65/IP66
C7 IP67 stainless steel lever
V-TYPE IP65/IP66
stainless steel lever
T-TYPE IP65 insulating
JEI zinc-plated steel lever
BIG hoods
W-TYPE aggressive environments
EMC
central lever
IP68
panel supports: page:COB