THIS DRAWING AND DESIGN HEREON CONSTITUTES A PROPRIETARY DESIGN OF PACKARD ELECTRIC DIVISION AND IS NOT TO BE DUPLICATED OR REPRODUCED WITHOUT AUTHORITY OF PACKARD ELECTRIC DIVISION.
DO NOT SCALE

PART NO. 1205 2848

ZONE	DATE	SYM	REVISION RECORD	AUTHORITY	DR	CK
	29JA88	—	REDRAWN FROM 'C' SIZE; MATING CONNECTOR INFORMATION ADDED · REVISION LEVEL REMAINS AT 'B'	119000	GF	FH
	18JL98	C	CONNECTOR SEAL 12052871 WAS 12052854	8KD	BKD	

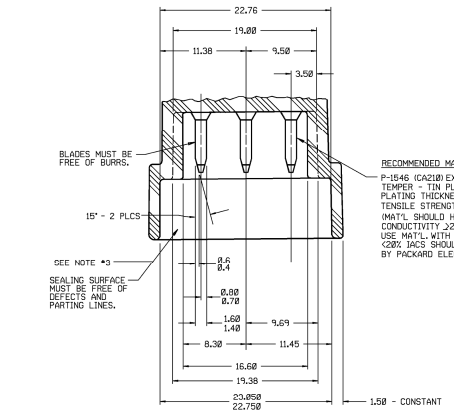

SECTION A-A

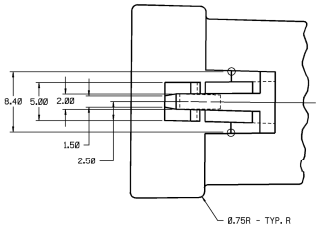

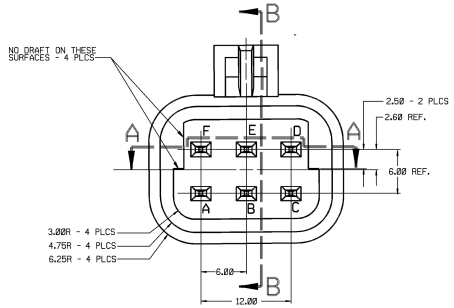

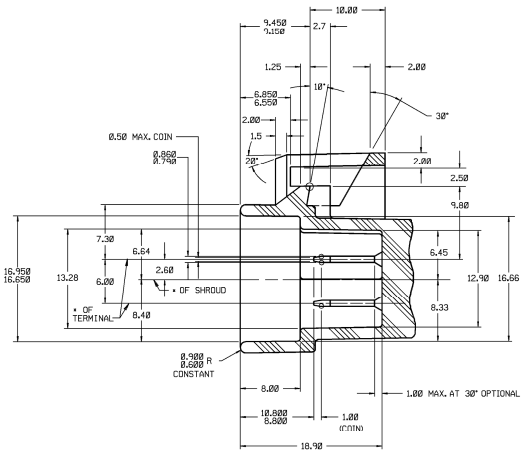

SECTION B-B

MATING CONNECTOR INFORMATION

SCALE 4:1

RECOMMENDED MAT'L — GLASS REINFORCED NYLON OR POLYESTER.

NOTES —
1. WHEN USING THIS INFORMATION FOR A NEW DESIGN, REQUEST THE LATEST COPY OF THIS PRINT FROM PACKARD ELECTRIC DIVISION.
2. ALL RADII 0.40, UNLESS OTHERWISE SPECIFIED.
3. THIS SURFACE IS 'CRITICAL' FOR PART FUNCTION. ALSO, ALL THREE PLACE DIMENSIONS ARE 'CRITICAL'.
4. THE SHAPE OF THE SHROUD AND LOCK ARE REPRESENTATIVE, VARIATIONS FOR ADAPTING THE SHROUD FOR SPECIFIC DEVICES AND/OR MOLDING METHODS ARE PERMITTED AS LONG AS FUNCTION IS MAINTAINED.

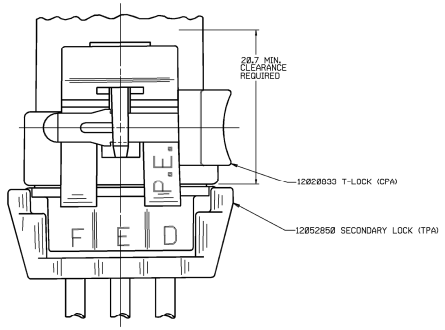

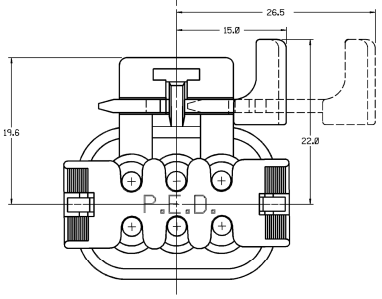

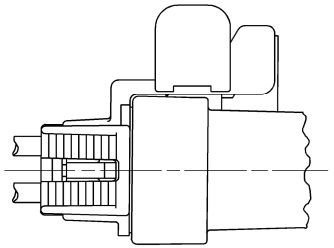

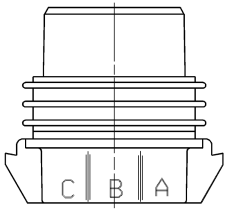

PART NO. 1205 2848

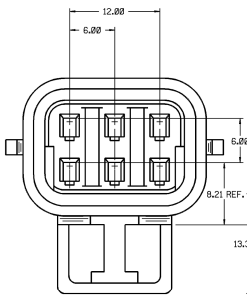

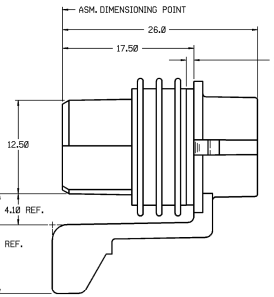

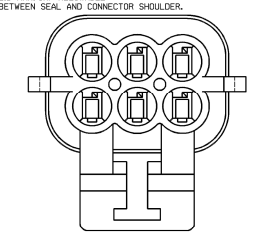

PART NO. 1205 2848

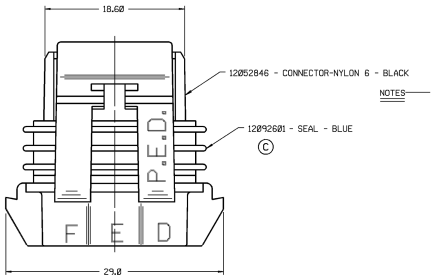

NOTES —
1. CAVITIES TO ACCEPT 12048074 TERMINAL OR EQUIVALENT.
2. CAVITIES TO ACCEPT 12048086 CABLE SEAL OR EQUIVALENT.
3. CONNECTOR TO ACCEPT 12052850 SECONDARY LOCK OR EQUIVALENT.
4. MATING CONNECTOR - 12052849 OR EQUIVALENT.
5. MAXIMUM CABLE DIAMETER - 2.80 MM.
6. WHEN PARTS ARE SHIPPED, THEY MUST BE PACKED IN PLASTIC BAGS OR SHIPPING CONTAINERS MUST BE LINED WITH PLASTIC LINERS. BAGS OR LINERS MUST BE SEALED TO AVOID ENTRY OF FOREIGN MATTER.
7. THIS CONNECTOR & SEAL ASM. TO ACCEPT 12020833 T-LOCK (CPA) WHEN MATED WITH 12052849 CONNECTOR OR EQUIVALENT.
8. SEALING CODE 3.

PACKARD ELECTRIC DIVISION
GENERAL MOTORS CORPORATION

PED / INTERGRAPH MICROSTATION	FILE SPECI	©©©©USER©©©©