THIS DRAWING IS UNPUBLISHED. RELEASED FOR PUBLICATION 2012
© COPYRIGHT 2012 Tyco Electronics AMP GmbH ALL RIGHTS RESERVED.

REVISIONS					
P	LTR	DESCRIPTION	DATE	DWN	APVD
	A5	Crimp height of PN 1-962919-1 to 2.34 corrected	18JUN2012	Kirs	Schus
	A6	Drawing updated.	02SEP2014	Kirs	Merz
	A8	Obsolete PN's removed from Table	28AUG2015	Abr	Merz
	A9	PN 2-968050-1 added. ECR-16-013095	13SEP2016	ABR	MERZ

NOTES
Bemerkungen

1 CONTACT AREA PRE SILVER MIN. 3µm
OTHER AREA PRE SILVER MIN. 1µm
SPRING BLANK
Kontaktzone vorversilbert min. 3µm
uebriger Bereich vorversilbert min. 1µm
Ueberfeder blank

2 PRE TIN MIN. 1µm
SPRING BLANK
Vorverzinnt min. 1µm
Ueberfeder blank

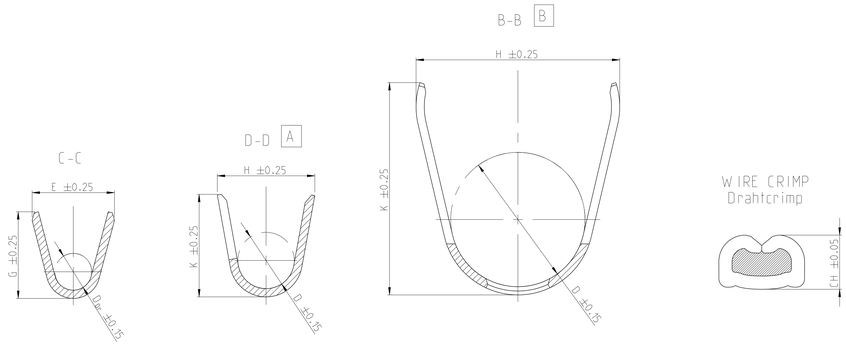

						SEE / siehe SECTION A-A Schnitt A-A	SEE / siehe SECTION B-B Schnitt B-B	SEE / siehe WIRE CRIMP Drahtcrimp					
SINGLE WIRE SEAL / Einzeldichtungssystem	2-2112966-2	A	7	CuFe2	1	6.0 AWG 10	E = 5.3 G = 5.7 D_{Dr} = 2.9	B H = 9.4 K = 9.8 D = 6.2	6.0 mm² = 2.35 AWG 10 = 2.30	1855636-6	4.5	7.8	11.0	29.3
	2-962919-2	E	6	CuFe2	1	4.0	E = 4.6 G = 4.8 D_{Dr} = 2.3	A H = 7.8 K = 7.8 D = 5.5	4.0 mm² = 2.34	2-878567-2	4.0	7.1	9.1	28.3
	1-962919-2	D		CuSn4	1					539757-2				
	1-962919-1	D			2									
	2-962918-2	E	5	CuFe2	1	>1.0 - 2.5	E = 3.8 G = 4.0 D_{Dr} = 1.7	A H = 7.8 K = 7.8 D = 5.5	2.5 mm² = 1.97 2.0 mm² = 1.83 1.5 mm² = 1.69	2-878566-2	3.6	6.7	8.7	28.3
	2-962918-1	E			2									
	1-962918-2	D		CuSn4	1					539757-2				
	1-962918-1	D			2									
	2-962917-1	E	5	CuFe2	2	0.5 - 1.0	E = 2.8 G = 3.0 D_{Dr} = 1.1	A H = 7.8 K = 7.8 D = 5.5	1.0 mm² = 1.56 0.75 mm² = 1.47 0.5 mm² = 1.38	2-878565-2	3.0	6.1	8.1	28.3
	1-962917-2	D		CuSn4	1					539757-2				
	1-962917-1	D			2									
FLK-WIRE / FLK-Leitung	2-968050-1	A	4	CuFe2	2	6.0 4.0	E = 5.3 G = 5.6 D_{Dr} = 2.9	A H = 7.3 K = 7.6 D = 4.6	6.0 mm² = 2.55 4.0 mm² = 2.17	2-878968-2	4.5	6.8	9.1	28.8
	1-968050-1	A		CuSn4	2									
	2-962846-1	D	3	CuFe2	2	4.0	E = 4.6 G = 4.8 D_{Dr} = 2.4	A H = 6.7 K = 7.0 D = 4.0	4.0 mm² = 2.33	2-878564-2	4.0	6.0	10.8	30.5
	1-962846-2	C		CuSn4	1					539759-2				
	1-962846-1	C			2									
	1-962845-2	D	1	CuSn4	1	>1.0 - 2.5	E = 3.8 G = 4.0 D_{Dr} = 1.7	H = 5.7 K = 5.9 D = 3.2	2.5 mm² = 1.97 2.0 mm² = 1.83 1.5 mm² = 1.69	2-878563-2	3.6	5.2	9.0	28.7
	1-962845-1	D			2					539759-2				
FLR-WIRE / FLR-Leitung	2-963736-2	C	3	CuFe2	1	4.0	E = 4.6 G = 4.8 D_{Dr} = 2.3	A H = 5.5 K = 5.7 D = 3.2	4.0 mm² = 2.33	2-878562-2	4.0	5.9	9.3	29.0
	2-963736-1	C			2									
	1-963736-2	B		CuSn4	1					-				
	1-963736-1	B			2									
	2-963735-2	C	1	CuFe2	1	>1.0 - 2.5	E = 3.8 G = 4.0 D_{Dr} = 1.7	A H = 4.5 K = 4.7 D = 2.6	2.5 mm² = 1.97 2.0 mm² = 1.83 1.5 mm² = 1.69	2-878561-2	3.5	5.1	8.1	27.8
	2-963735-1	C			2									
	1-963735-2	B		CuSn4	1					-				
	1-963735-1	B			2									
	2-963734-2	C	1	CuFe2	1	0.5 - 1.0	E = 2.8 G = 3.0 D_{Dr} = 1.1	A H = 3.3 K = 3.5 D = 1.8	1.0 mm² = 1.56 0.75 mm² = 1.47 0.5 mm² = 1.38	2-878654-2	3.0	4.6	6.8	26.5
	2-963734-1	C			2									
	1-963734-2	B		CuSn4	1					539759-2				
	1-963734-1	B			2									
	2-965984-1	A	2	CuFe2	2	0.2 - 0.5	E = 2.2 G = 2.2 D_{Dr} = 0.8	A H = 3.1 K = 3.1 D = 1.4	-	-	2.5	3.7	5.7	26.5
	1-965984-1	B		CuSn4	2									
	TE ORDER-NO. STRIP FORM TE Bestellnr. Bandware	REV.	DESIGN Ausfuehrung	MATERIAL Werkstoff	SURFACE Oberflaeche	DGB mm²	WIRE CRIMP Drahtcrimp	INSUL. CRIMP Isolationscrimp	WIRE CRIMP HEIGHT CH Drahtcrimphoehe CH	APPLICATION TOOL (MQC APPLICATOR HD) Anschlagwerkzeug	A	B	C	D
							CRIMP DIMENSIONS mm Crimpabmessungen mm			EXTRACTION TOOL Ausdrueckwerkzeug No. 726548-1				

FLR-/FLK-WIRE
FLR-/FLK-Leitung

DESIGN 1
Ausfuehrung 1

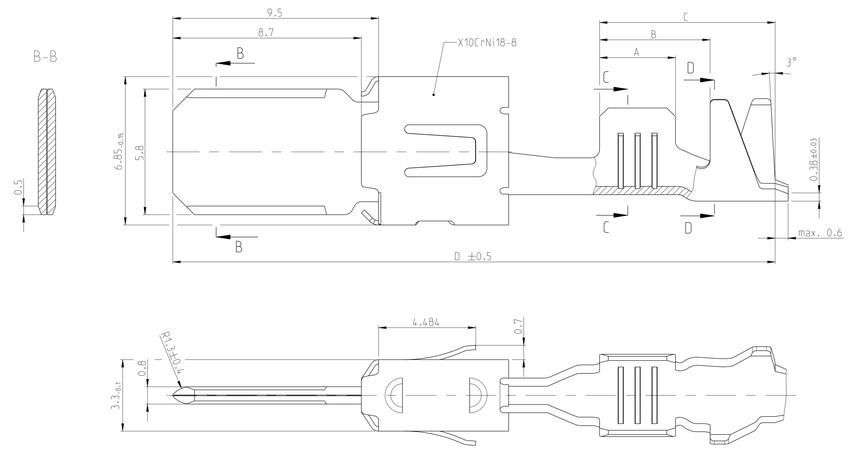

DESIGN 2
Ausfuehrung 2

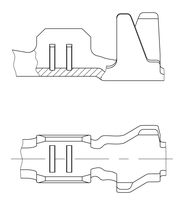

DESIGN 3
Ausfuehrung 3

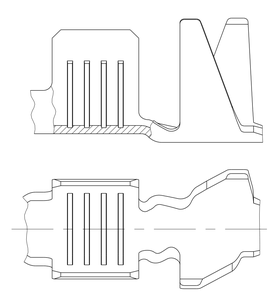

DESIGN 4
Ausfuehrung 4

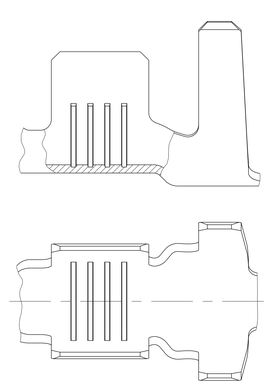

SINGLE WIRE SEAL
Einzeldichtungssystem

DESIGN 5
Ausfuehrung 5

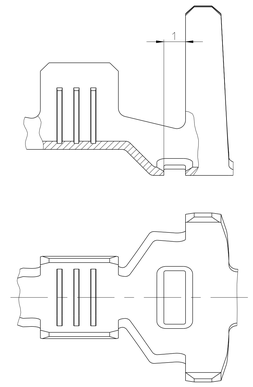

DESIGN 6
Ausfuehrung 6

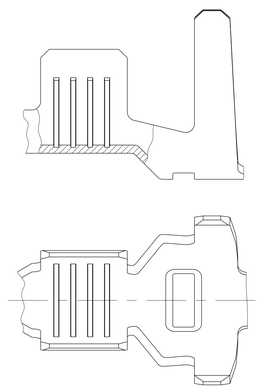

DESIGN 7
Ausfuehrung 7

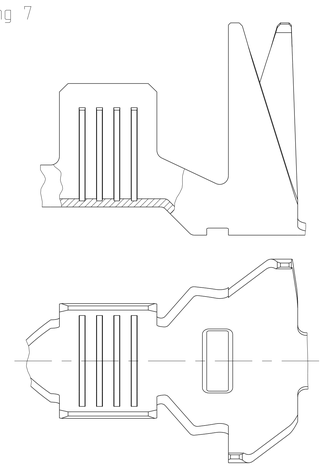

THIS DRAWING IS A CONTROLLED DOCUMENT.

DIMENSIONS: mm

TOLERANCES UNLESS OTHERWISE SPECIFIED: .XX ±0.2 .XXX ±0.05 ANGLES ±1°

MATERIAL - -
FINISH - -

DWN 31JUL2001 J.Meierhoefer
CHK 31JUL2001 J.Meierhoefer
APVD -

PRODUCT SPEC 108-18064
APPLICATION SPEC 114-18052
WEIGHT -

Customer Drawing

TE Connectivity

NAME TAB 5.8 x 0.8 Flachstecker 5.8 x 0.8

SIZE A0 | CAGE CODE 00779 | DRAWING NO C-1241895 | RESTRICTED TO -

SCALE 10:1 | SHEET 1 OF 1 | REV A9