THIS DRAWING IS UNPUBLISHED. RELEASED FOR PUBLICATION –,– .
© COPYRIGHT – BY TYCO ELECTRONICS CORPORATION. ALL INTERNATIONAL RIGHTS RESERVED.

LOC	DIST
GP	00

REVISIONS

P	LTR	DESCRIPTION	DATE	DWN	APVD
	0	ORIGINAL	12APR2012	CJV	CWR

△1 ZINC PLATED .000200–.000400 THICK, YELLOW CHROMATE COATING.

△2 ZINC PLATED .000200–.000400 THICK, CLEAR CHROMATE COATING.

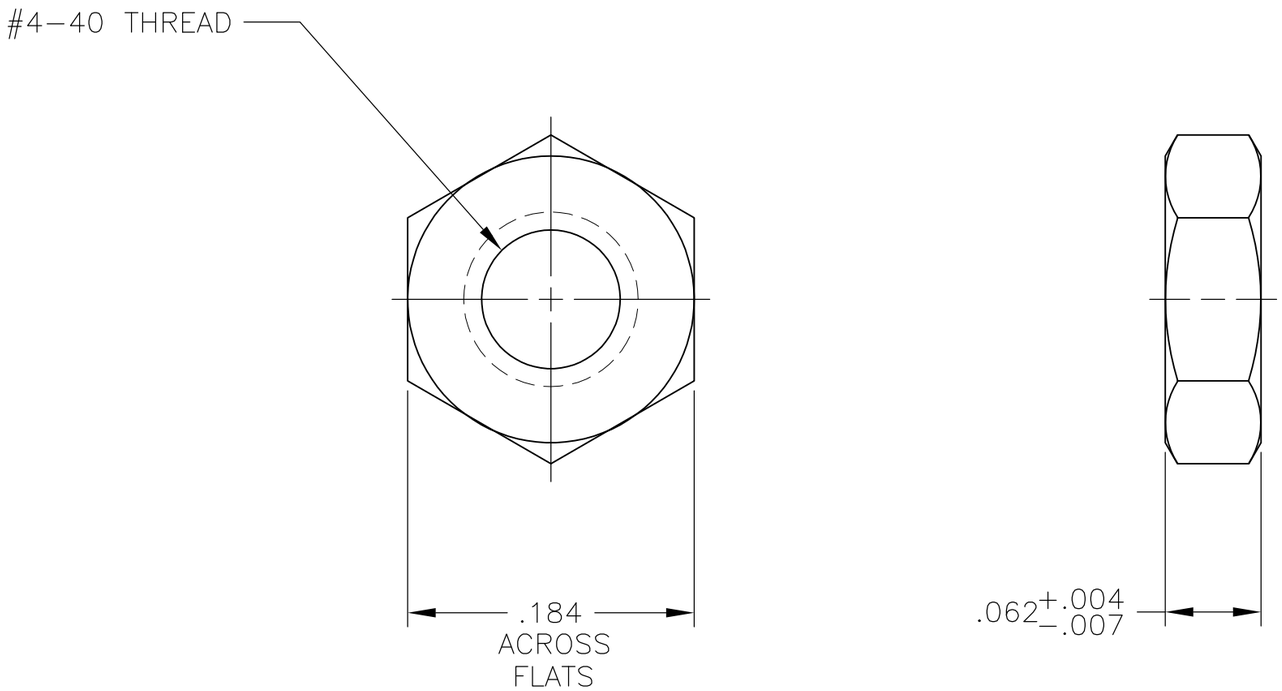

FINISH	PART NUMBER
△2	5205821–3
△1	5205821–2

THIS DRAWING IS A CONTROLLED DOCUMENT.

DIMENSIONS: INCHES

TOLERANCES UNLESS OTHERWISE SPECIFIED:

0 PLC	± –
1 PLC	± –
2 PLC	± –
3 PLC	± .005
4 PLC	± –
ANGLES	± –

MATERIAL: COLD ROLLED STEEL

FINISH: SEE TABLE

DWN	C. VALENTINE	12APR2010
CHK	C. ROHDE	12APR2012
APVD	C. ROHDE	12APR2012
PRODUCT SPEC	—	
APPLICATION SPEC	—	
WEIGHT	—	

Tyco Electronics

Tyco Electronics Corporation
Harrisburg, PA 17105–3608

NAME: #4–40 HEX NUT, AMPLIMITE
–
–

SIZE	CAGE CODE	DRAWING NO	RESTRICTED TO
A3	00779	C–5205821	—

CUSTOMER DRAWING

SCALE	SHEET	REV
10:1	1 OF 1	0