THIS DRAWING IS UNPUBLISHED. RELEASED FOR PUBLICATION -,- .
© COPYRIGHT - By - ALL RIGHTS RESERVED.

REVISIONS

P	LTR	DESCRIPTION	DATE	DWN	APVD
	B2	REVISED PER ECO-16-004800	08SEP2016	NK	MZ
	C	REVISED PER ECR-16-016563	07DEC2016	RS	MZ

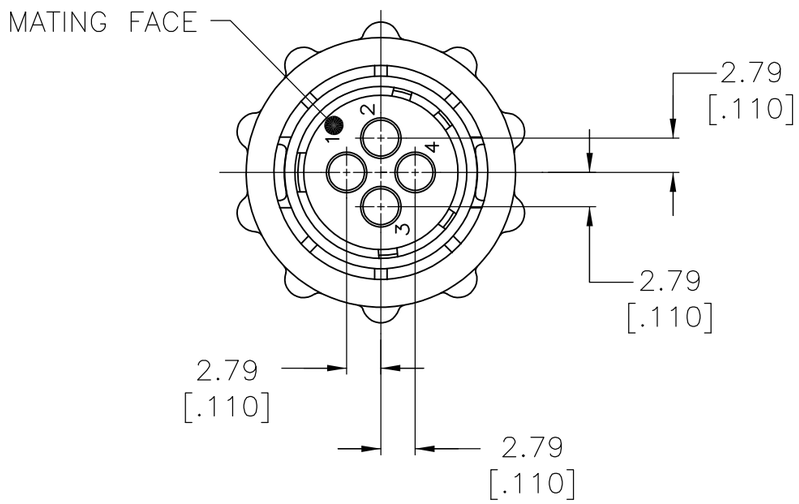

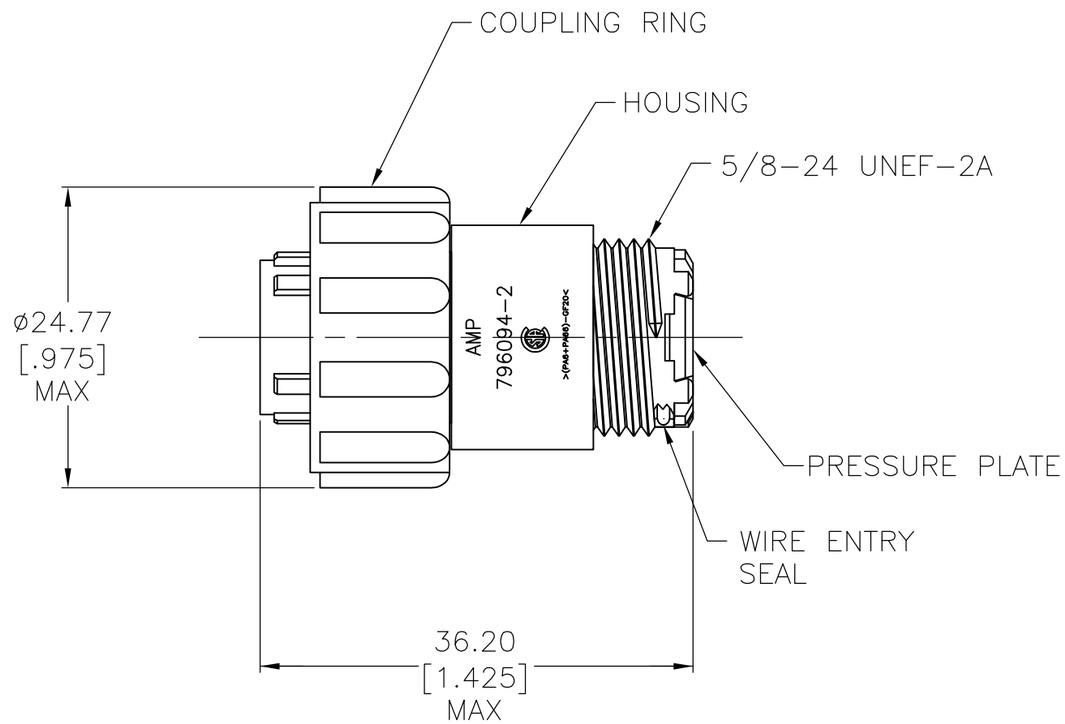

1 THIS PART WILL ACCEPT FOUR (4) MULTIMATE SOCKET CONTACTS.

2 COUPLING RING, HOUSING, AND PRESSURE PLATE: NYLON, BLACK.
WIRE ENTRY SEAL: ELASTOMER, RED-IRON OXIDE.

	COUPLING RING STYLE	PART NUMBER
OBSOLETE	PULL FREE	~~796094-4~~
OBSOLETE	METAL	~~796094-3~~
	STANDARD	796094-2

THIS DRAWING IS A CONTROLLED DOCUMENT.

DIMENSIONS: mm [INCHES]

TOLERANCES UNLESS OTHERWISE SPECIFIED:
0 PLC ± -
1 PLC ± -
2 PLC ± 0.13 [.005]
3 PLC ± -
4 PLC ± -
ANGLES ± -

MATERIAL -

FINISH -

DWN C.DORWART 31 AUG 98
CHK R.WALTER 31 AUG 98
APVD R.WALTER 31 AUG 98
PRODUCT SPEC —
APPLICATION SPEC —
WEIGHT —

TE Connectivity

NAME
PLUG ASSEMBLY, 11-4, STANDARD SEX,
SERIES I, SEALED,
CIRCULAR PLASTIC CONNECTOR

SIZE	CAGE CODE	DRAWING NO	RESTRICTED TO
A3	00779	C-796094	—

CUSTOMER DRAWING | SCALE 2:1 | SHEET 1 OF 1 | REV C