SYMBOL DEFINITION		
A DIMENSION WITHOUT AN INSPECTION REPORT SYMBOL ( ) DOES NOT REQUIRE INSPECTION. IT MAY BE CONTROLLED ON THE INDIVIDUAL COMPONENT DRAWING.	TOTAL NO OF INSPECTIONS REQUIRED	15
	LAST NO. USED	15

MISSING SYMBOLS
NO MISSING SYMBOL NUMBER

DWG STATUS DATE	STG	REV	N/P	CHG	ZONE	REVISION HISTORY	AUTH	DR	APVD 1	APVD 2
30JL02	R	04	-			CLEARED REVISION COLUMN; ALL PARTS - REDRAWN TO PD & UPDATED PDM ATTRIBUTES	226419	MRF	JVM	TTP
24JA03	R	05	-	-		ADVANCED REVISION LEVEL	235918	LMB	LMB	TV
23JA04	R	06	-	-		ADVANCED REVISION LEVEL	251141	LMB	LMB	LN
24SE04	R	07	-	-		ADDED TERMINAL I.D. NOTE	259075	MDH	AUG	MKM
13OC04	R	08	-	-		ADVANCED REVISION LEVEL	259807	CCV	AUG	MY
25AP06	R	09	-	-		12191811-12 - UPDATED PDM ATTRIBUTES	276502	JBD	AUG	JES

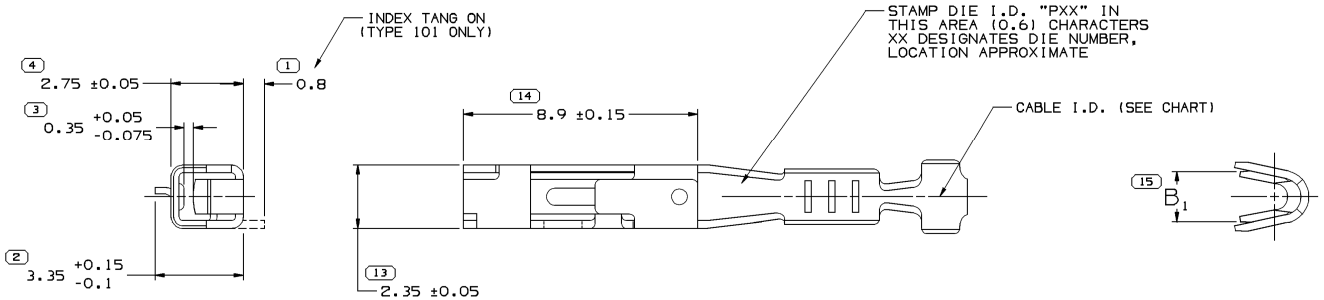

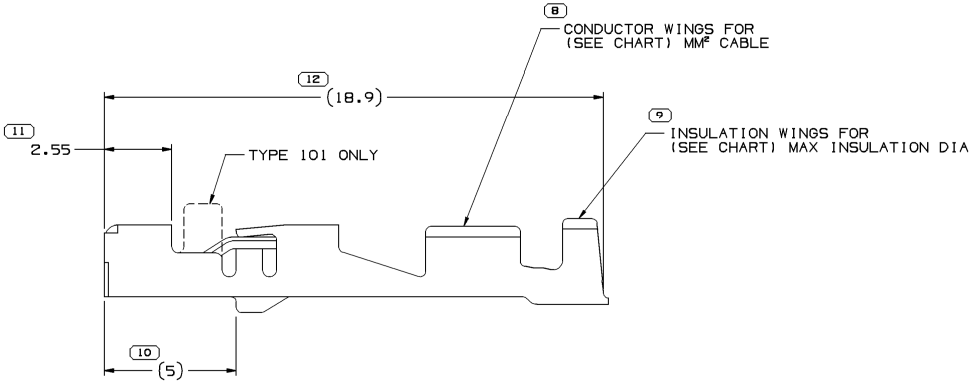

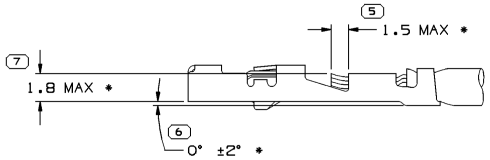

TERMINAL AND CABLE ALIGNMENT
SCALE 5:1

NOTES

1. UNLESS OTHERWISE SPECIFIED AND/OR INDICATED: DIMENSIONS ARE TO FACE OF VIEW SHOWN AND AUTOMATICALLY ROUNDED BY COMPUTER FOR INSPECTION (SEE MATH MODEL FOR PRECISE DIMENSIONS). FOR ALL OTHER DIMENSIONS NOT SHOWN BUT REQUIRED FOR TOOL BUILD, SEE MATH MODEL FOR PRECISE TOOL PATH DATA.
2. MATING TERMINAL 15304701 OR EQUIVALENT.
3. * DENOTES DIMENSIONS MADE AT CUT-OFF AND CRIMP DIE.

PART NO	REV	STATUS	MAT'L SIZE	MAT'L SPEC	SIZE (MM²)	ID	DIA	TYPE	B_1±0.2
15326398	A2	RESTRICTED	0.3 X 27.38	M3659A23 C42500 EX HD	1-1.5	15	2.4-1.9	101	2.95
15317756	B2		0.3 X 27.38	M3659A23 C42500 EX HD	0.35-0.5	21	1.1-1.3	101	2.1
12191814	C2	RESTRICTED	0.3 X 27.38	M3659A23 C42500 EX HD	0.75-1	17	2.25-1.7	102	2.65
12191813	C2	RESTRICTED	0.3 X 27.38	M3659A23 C42500 EX HD	0.35-0.5	21	1.85-1.2	102	2.1
12191812	C6		0.3 X 27.38	M3659A23 C42500 EX HD	0.75-1	17	2.25-1.7	101	2.65
12191811	C6		0.3 X 27.38	M3659A23 C42500 EX HD	0.35-0.5	21	1.85-1.2	101	2.1
PLATED					CABLE				

(13) PROCESS SENSITIVE DIMENSION

DIMENSIONS ENCLOSED IN ( ) INDICATE REFERENCE DIMENSIONS AND NO TOLERANCE LIMITS ARE ESTABLISHED

DIMENSIONAL RANGE (MM)		CHART D
FROM	0	>12
TO	12	
TOLERANCE UNLESS OTHERWISE SPECIFIED	±0.1	±0.2
ANGULAR TOLERANCE ±2°		

DWG TYPE: PART DRAWING

STYLE

VOLUME (CM³) | DISTR CODE

UNLESS OTHERWISE SPECIFIED

THIS DOCUMENT IS IN ACCORDANCE WITH ASME Y14.5M-1994 AS AMENDED BY THE GM GLOBAL DIMENSIONING AND TOLERANCING ADDENDUM - 1997. ALL GEOMETRIC TOLERANCES AND RELATED DATUMS APPLY RFS. RULE #1(PERFECT FORM AT MMC) DOES NOT APPLY WHEN RELATIONSHIP BETWEEN FEATURES IS ESTABLISHED BY ORIENTATION OR LOCATION TOLERANCES. SEPARATE POSITION CALLOUTS MAY BE GAGED SEPARATELY, REGARDLESS OF DATUM REFERENCE.

ALL DIMENSIONS ARE IN MILLIMETERS

REFERENCE

THIRD ANGLE PROJECTION

DO NOT SCALE

USE MATH DATA

CAD UG UNIGRAPHICS

DELPHI

DELPHI PACKARD ELECTRIC SYSTEMS
WARREN, OH

		DATE
DR	E. BUNGO	31AU94
APVD1	E. MONCISVAIS	07DE95
APVD2	MANUEL VEGA	07DE95
APVD3	S. C. HSIEH	06JA96
APVD4		
APVD5		

SUBSTANCES OF CONCERN AND RECYCLED CONTENT PER DELPHI 10949001

MATERIAL: SEE CHART

DRAWING NAME: TAXI TERM F GT 150

DRAWING NUMBER: 12191810

SIZE	SCALE	FRAME NO	SHEET NO	STG	REV	N/P
A1	10:1	1 OF 1	1 OF 2	R	09	-

User: qzlq4p Part: 12191810-CUS01-S01 Message: Date: 09-May-03 Time: 18:15