THIS DRAWING IS UNPUBLISHED. RELEASED FOR PUBLICATION -,- .
© COPYRIGHT - By - ALL RIGHTS RESERVED.

LOC	DIST
G	02

REVISIONS

P	LTR	DESCRIPTION	DATE	DWN	APVD
	H2	REVISED PER ECO-11-005027	11MAR11	RK	HMR

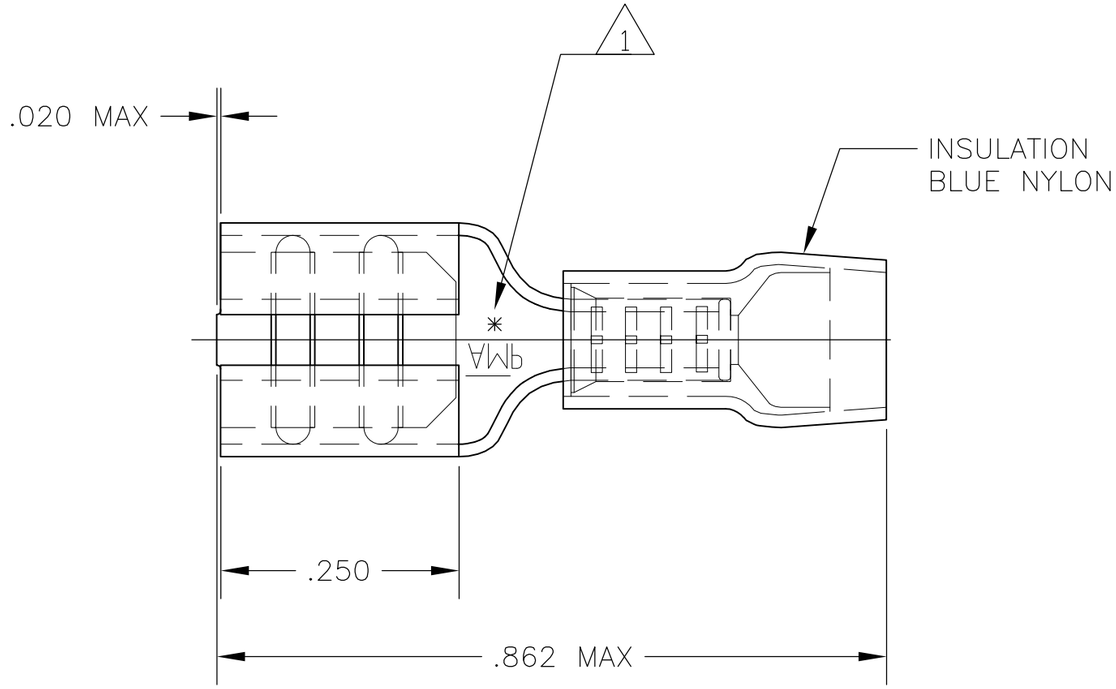

1. ASTERISK * FOR PHOS BRONZE ITEMS ONLY.
2. MATES WITH A .031 THK TAB

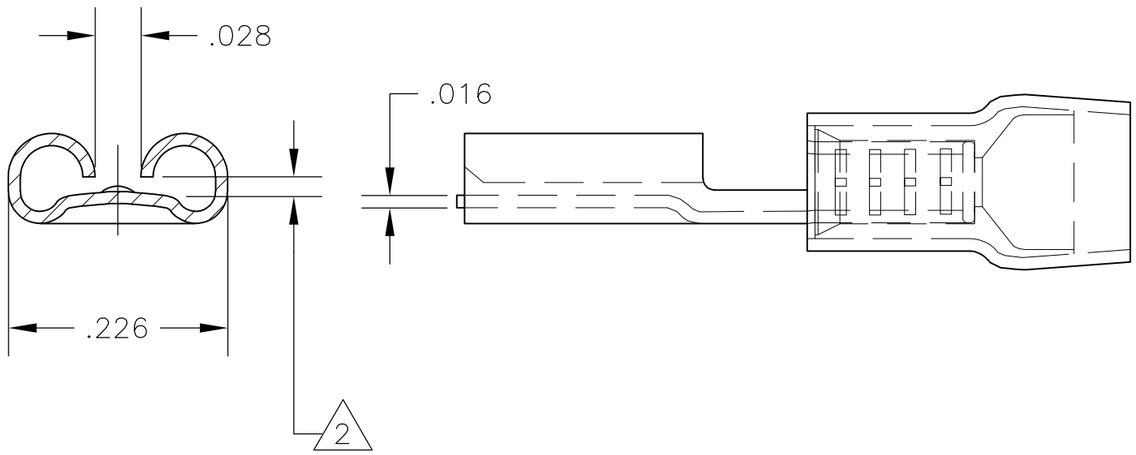

9-160479-5 ON TAPE		5-160479-5
9-160479-2 ON TAPE		5-160479-2
TIN	PHOS BRONZE	9-160479-5
TIN	BRASS	9-160479-2
FINISH	MATERIAL	ORDER NO.

THIS DRAWING IS A CONTROLLED DOCUMENT.

DIMENSIONS: INCHES

TOLERANCES UNLESS OTHERWISE SPECIFIED:
0 PLC ± -
1 PLC ± -
2 PLC ± -
3 PLC ± .005
4 PLC ± -
ANGLES ± 5°

MATERIAL -
FINISH -

DWN jr ruth 21MAY04
CHK T MICHIELUTTI 21MAY04
APVD T MICHIELUTTI 21MAY04
PRODUCT SPEC —
APPLICATION SPEC —
WEIGHT —

TE Connectivity

NAME
FASTON RECEPTACLE, PIDG
.187 SERIES
WIRE SIZE: 16-14 AWG

SIZE	CAGE CODE	DRAWING NO	RESTRICTED TO
A3	00779	C-160479	—

CUSTOMER DRAWING | SCALE 1:1 | SHEET 1 OF 1 | REV H2