SYMBOL DEFINITION		
A DIMENSION WITHOUT AN INSPECTION REPORT SYMBOL ( ) DOES NOT REQUIRE INSPECTION. IT MAY BE CONTROLLED ON THE INDIVIDUAL COMPONENT DRAWING.	TOTAL NO OF INSPECTIONS REQUIRED	7
	LAST NO. USED	7

MISSING SYMBOLS
NO MISSING SYMBOL NUMBER

DWG STATUS					ZONE	REVISION HISTORY	AUTH	DR	APVD 1	APVD 2
DATE	STG	REV	N/P	CHG						
30MY96	-	-	-	-		ALL PARTS - PID REDRAWN FROM SEPARATE OD & UPDATED - NO REV UPDATE REQ'D	172603	JCS	WTP	WTP
30MY97	-	-	-	-		ALL PARTS - REVISED NOTES #1 & #3 - NO REV UPDATE REQ'D	180366	JIL	JVS	JVS
22OC97	-	-	-	-		ALL PARTS - PID UPDATED - NO REV UPDATE REQ'D	183104	EML	JVM	JVM
12MR98	-	-	-	-		ALL PARTS - REVISED - NO REV UPDATE REQ'D	186137	ROM	OOD	OOD
15AP09	R	05	-	-		ALL PARTS - RESTRICTED & ADDED "RESTRICTED USAGE" AND "REPLACED BY" COLUMNS FROM CHART	407809	JAR	JVM	MGC
09SE10	R	06	-	-		ALL PARTS - REDRAWN	411744	MAB	JVM	FRE
28MY12	R	07	-	-		ALL PARTS - REVISED PLATING NOTES	418348	AH	AH	AH

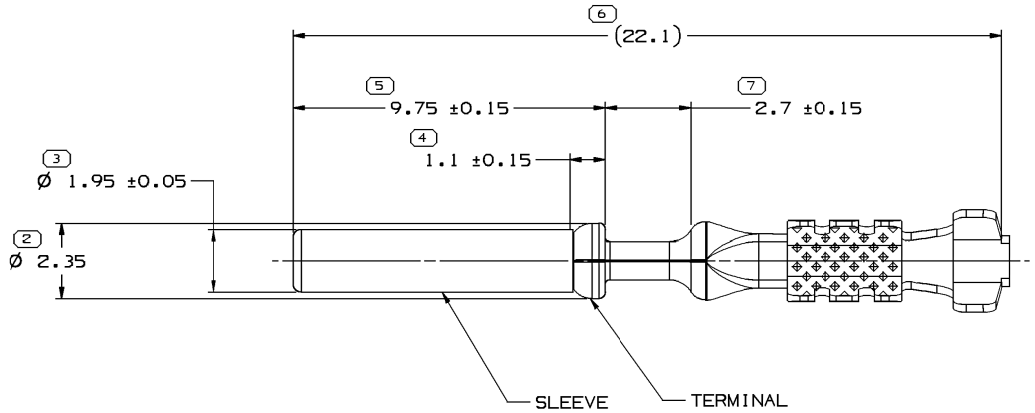

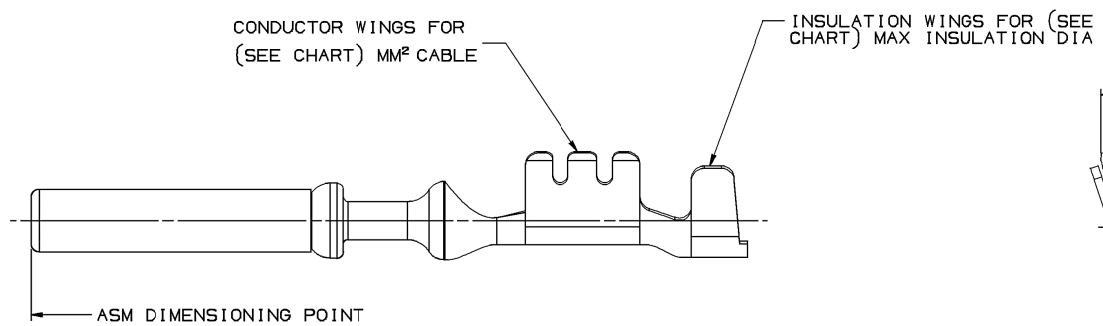

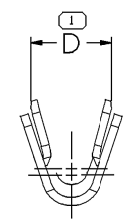

MATERIAL:

TERMINAL - 0.25 MM THK CDA 510 HALF HARD PHOSPHOR BRONZE

SLEEVE - STAINLESS STEEL UNPLATED

PLATING NOTE:

TERMINAL IS SELECTIVELY NICKEL, TIN & GOLD PLATED.

NOTES

1. UNLESS OTHERWISE SPECIFIED AND/OR INDICATED:

   DIMENSIONS ARE TO FACE OF VIEW SHOWN AND AUTOMATICALLY ROUNDED BY COMPUTER FOR INSPECTION (SEE MATH MODEL FOR PRECISE DIMENSIONS). FOR ALL OTHER DIMENSIONS NOT SHOWN BUT REQUIRED FOR TOOL BUILD, SEE MATH MODEL FOR PRECISE TOOL PATH DATA.

2. REFERENCE MATING COMPONENTS OR EQUIVALENT:

   HEADER CONNECTOR 12129025
   PIN 12092396

3. FORCE REQUIRED TO PULL SLEEVE FROM TERMINAL AFTER ASSEMBLY, 60N MINIMUM.

4. MAXIMUM CURRENT CAPACITY IS 7 AMPS.

5. TERMINALS MUST FIT A MAX 2.54 MM DIA GAGE HOLE 12±0.3 MM DEEP AFTER CRIMPING.

PART NO	REV	STATUS	SIZE (MM²) CABLE		ID NO	D ±0.2	RESTRICTED USAGE	REPLACED BY
12084913	H3		0.35 - 0.5	1.92	21	2.1	RESTRICTED	15359001
12084912	K3		0.8	2.04	18	2.5	RESTRICTED	15359002

1 PROCESS SENSITIVE DIMENSION

DIMENSIONS ENCLOSED IN ( ) INDICATE REFERENCE DIMENSIONS AND NO TOLERANCE LIMITS ARE ESTABLISHED

DIMENSIONAL RANGE (MM)		CHART D
FROM	0	>12
TO	12	
TOLERANCE UNLESS OTHERWISE SPECIFIED		
	±0.1	±0.2
ANGULAR TOLERANCE ±2°		

A ——— LINE DRAWN THROUGH A PART NUMBER INDICATES THAT PHYSICAL PARTS ARE NOT AVAILABLE FOR ORDERING.

PART NUMBERS THAT DO NOT HAVE A LINE PRESENT INDICATE THAT PHYSICAL PARTS ARE AVAILABLE FOR ORDERING.

CONTACT DELPHI SALES TO ASSURE AVAILABILITY OF PARTS.

DWG TYPE: PART DRAWING

STYLE

VOLUME (CM³)

DISTR CODE: D

UNLESS OTHERWISE SPECIFIED

THIS DOCUMENT IS IN ACCORDANCE WITH ASME Y14.5M-1994 AS AMENDED BY THE GM GLOBAL DIMENSIONING AND TOLERANCING ADDENDUM-2001. SEPARATE PATTERNS OF FEATURES MAY BE GAGED SEPARATELY REGARDLESS OF DATUM REFERENCES.

ALL DIMENSIONS ARE IN MILLIMETERS

REFERENCE

THIRD ANGLE PROJECTION

DO NOT SCALE

USE MATH DATA

NX

DELPHI

DELPHI PACKARD ELECTRICAL/ELECTRONIC ARCHITECTURE
WARREN, OH

COPYRIGHT 1996 DELPHI CORPORATION AND/OR ITS AFFILIATES.
ALL RIGHTS RESERVED.
REVISED 2012
THIS DRAWING IS THE PROPERTY OF DELPHI CORPORATION. THE REPRODUCTION, DISTRIBUTION AND UTILIZATION OF THIS DOCUMENT OR ITS RELATED CAD MATH DATA, AS WELL AS COMMUNICATION OF ANY CONTENT TO OTHERS, WITHOUT EXPRESS AUTHORIZATION IS PROHIBITED.

		DATE
DR		
APVD1	JUAN M.CANO	30MY96
APVD2	W. TURNBULL	30MY96
APVD3	V. BANCROFT	19JN96
APVD4		
APVD5		

SUBSTANCES OF CONCERN AND RECYCLED CONTENT PER DELPHI 10949001

MATERIAL: SEE DRAWING

DRAWING NAME: TAXI ASM TERM F MIC/P 100W

DRAWING NUMBER: 12084911

SIZE	SCALE	FRAME NO	SHEET NO	STG	REV	N/P
A1	10:1	1 OF 1	1 OF 2	R	07	-

User: bzmb48
Part: 12084911-CUS01-S01 Date: 29-May-12 Time: 16:53
Message: bzmb48,05292012,16:53,115pdas,nor