THIS DRAWING IS UNPUBLISHED. VERTRAULICHE UNVEROEFFENTLICHTE ZEICHNUNG
© COPYRIGHT 2001 BY –
RELEASED FOR PUBLICATION: FREI FUER VEROEFFENTLICHUNG
ALL RIGHTS RESERVED. ALLE RECHTE VORBEHALTEN.

MATED WITH: PASSEND ZU: –

was 116-18001-002

LOC	DIST
AI	–

PROJECT NR.: –

REVISIONS / ÄNDERUNGEN

P	LTR	DESCRIPTION / BESCHREIBUNG	DATE	DWN	APVD
	A6	REVISED PER ECO-11-005150	21MAR11	RK	HMR

REMARKS
Bemerkungen

1. PRE TINNED / vorverzinnt — 1–2µm

2. ZONE "A": MIN 0.8µm ELECTROPL. Au OVER MIN 1.3µm ELECTROPL. Ni LAYER
   min 0.8µm galv. Au über min 1.3µm galv. Ni
   ZONE "B": 1–2µm ELECTROPL. Sn OVER MIN 0.1µm ELECTROPL. Ni
   1–2µm galv. Sn über min 0.1µm galv. Ni
   REST: min 0.1µm ELECTROPL. Ni
   min 0.1µm galv. Ni

3. ZONE "A": MIN 3µm ELECTROPL. Ag
   min. 3µm galv. Ag
   REST: 0.5µm ELECTROPL. Ag
   0.5µm galv. Ag

4. ZONE "A": MIN 3µm ELECTROPL. Ag
   min 3µm galv. Ag
   ZONE "B": 1–3µm ELECTROPL. Sn
   1–3µm galv. Sn
   REST: SILVER OR TIN ALLOWED IN TRANSITION AREAS.OVERLAPPING LAYERS AND PLAIN SURFACES ARE NOT ALLOWED.
   Silber oder Zinn im übergangsbereich erlaubt.
   überlagernde Schichten oder blanke Stellen sind nicht erlaubt.

5. AVAILABILITY MUST BE CHECKED BY TE CONNECTIVITY
   Verfügbarkeit ist von TE CONNECTIVITY zu prüfen

SECTION C–C / Schnitt C–C (für EDS)

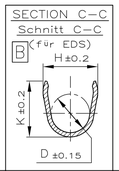

SECTION A–A / Schnitt A–A

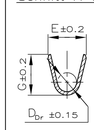

SECTION B–B / Schnitt B–B

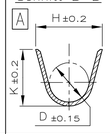

F–Crimp

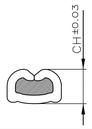

	ORDER–Nr. STRIP FORM Bandware	ORDER–Nr. LOOSE PIECE Einzelausführung	REV.	MATERIAL Werkstoff	SURFACE Oberfläche	DGB [mm²]	WIRE CRIMP Drahtcrimp	INSUL.–CRIMP Isol.–Crimp	WIRE CRIMP HEIGHT CH Drahtcrimp–Höhe CH	APPLICATION TOOL Anschlag–WKZ	HAND TOOL Handzange	A	B	C	ORDER–Nr. SINGLE SEAL Einzeldichtung	ORDER–Nr. DEAD END PLUG Blindstopfen
							CRIMP DIMENSION (mm) Crimpabmessungen (mm)			EXTRACTION TOOL Ausdrückwerkzeug Nr.: 872070–1						
Version B (SINGLE WIRE SEAL–SYSTEM / Einzel–Dichtungs–System)	5 1–929975–0	1–962982–0	N	CuFe2	2	>1.0–2.5 FLR	E = 3.6 G = 3.8 D_{Dr} = 1.7	B H = 5.0 K = 5.0 D = 3.6	2.5mm² = 1.97 2.0mm² = 1.82 1.5mm² = 1.67	MQC–Applicator 2–878486–2	734289–2	4	6.9	8.5	828921–1	828922–1
	5 929975–9	962982–9	N		3											
	929975–8	962982–8	N	CuNiSi	2											
	929975–7	962982–7	N		3											
	929975–4	962982–4	M	CuFe2	1											
	929975–1	962982–1	M	CuNiSi	1											
	1–929974–4	1–962981–4	A	CuNiSi	4	0.5–1.0 FLR	E = 2.6 G = 2.8 D_{Dr} = 1.1	B H = 4.8 K = 4.8 D = 3.2	1.0mm² = 1.45 0.75mm² = 1.36 0.5mm² = 1.27	MQC–Applicator 2–878485–2	734289–1	3	5.4	7	828920–1	828922–1
	5 1–929974–0	1–962981–0	N	CuFe2	2											
	929974–9	962981–9	N		3											
	929974–8	962981–8	N	CuNiSi	2											
	929974–7	962981–7	N		3											
	929974–4	962981–4	M	CuFe2	1											
	929974–1	962981–1	M	CuNiSi	1											
	5 1–929973–0	1–962980–0	N	CuFe2	2	0.2–0.4 FLR	E = 2.1 G = 2.1 D_{Dr} = 0.8	B H = 4.5 K = 4.5 D = 3.2	– 0.35mm² = 1.11 –	MQC–Applicator 2–878484–2	734289–1	3	5.4	7	828920–1	828922–1
	5 929973–9	962980–9	N		3											
	5 929973–8	962980–8	N	CuNiSi	2											
	5 929973–7	962980–7	N		3											
	5 929973–4	962980–4	M	CuFe2	1											
	929973–1	962980–1	M	CuNiSi	1											
Version A (UNSEALED / ungedichtet)	5 1–929972–0	1–962979–0	K	CuFe2	2	>2.5–4.0 FLR	E = 4.3 G = 4.5 D_{Dr} = 2.4	A H = 5.4 K = 5.6 D = 3.2	4.0mm² = 2.30 3.0mm² = 2.05	MQC–Applicator 2–878483–2	734285–3	4	5.5	8.5		
	5 929972–9	962979–9	K		3											
	5 929972–8	962979–8	K	CuNiSi	2											
	5 929972–7	962979–7	K		3											
	5 929972–4	962979–4	J	CuFe2	1											
	929972–1	962979–1	J	CuNiSi	1											
	5 1–929971–0	1–962978–0	M	CuFe2	2	>1.0–2.5 FLR	E = 3.6 G = 3.8 D_{Dr} = 1.7	A H = 4.3 K = 4.5 D = 2.6	2.5mm² = 1.97 2.0mm² = 1.82 1.5mm² = 1.67	MQC–Applicator 2–878482–2	734285–2	4	5.5	8.5		
	5 929971–9	962978–9	M		3											
	929971–8	962978–8	M	CuNiSi	2											
	929971–7	962978–7	M		3											
	5 929971–4	962978–4	L	CuFe2	1											
	929971–1	962978–1	L	CuNiSi	1											
	5 1–929970–0	1–962977–0	M	CuFe2	2	>0.5–1.0 FLR	E = 2.6 G = 2.8 D_{Dr} = 1.1	A H = 3.2 K = 3.4 D = 1.8	1.0mm² = 1.45 0.75mm² = 1.36 0.5mm² = 1.27	MQC–Applicator 2–878481–2	734285–1	3	4.5	7		
	5 929970–9	962977–9	M		3											
	929970–8	962977–8	M	CuNiSi	2											
	929970–7	962977–7	M		3											
	5 929970–4	962977–4	L	CuFe2	1											
	929970–1	962977–1	L	CuNiSi	1											
	5 1–929969–0	1–962976–0	K	CuFe2	2	0.2–0.4 FLR	E = 2.1 G = 2.1 D_{Dr} = 0.8	A H = 2.5 K = 2.5 D = 1.4	0.35mm² = 1.11 0.25mm² = 1.07 0.2mm² = 1.05	MQC–Applicator 2–878480–2	734285–1	3	4.5	7		
	5 929969–9	962976–9	K		3											
	5 929969–8	962976–8	K	CuNiSi	2											
	5 929969–7	962976–7	K		3											
	5 929969–4	962976–4	J	CuFe2	1											
	929969–1	962976–1	J	CuNiSi	1											

VERSION A
(USEALED / ungedichtet)

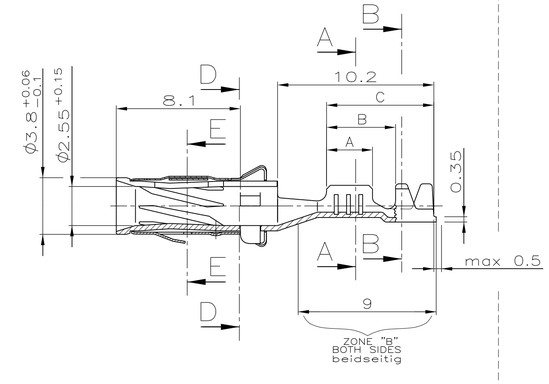

VERSION B
(SINGLE WIRE SEAL–SYSTEM / Einzel–Dichtungs–System)

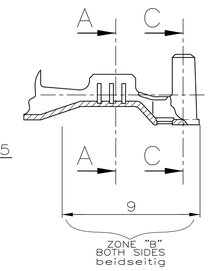

CUT–OFF FOR STRIP FORM AND LP–PARTS
Trennstelle fuer Bandware und LP–Teile

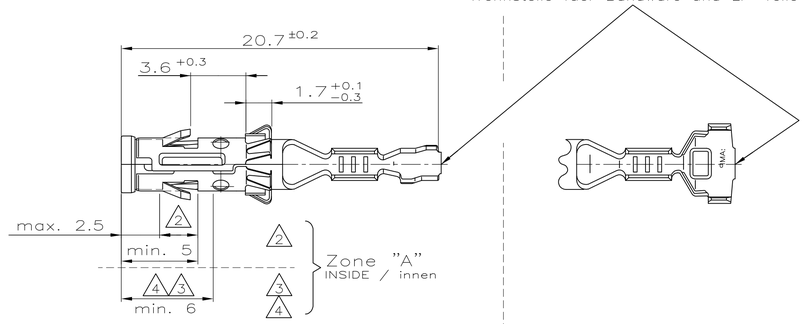

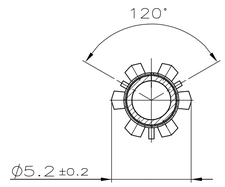

SECTION / Schnitt D–D

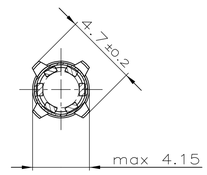

SECTION / Schnitt E–E

THIS DRAWING IS A CONTROLLED DOCUMENT.
DIESE ZEICHNUNG IST EIN KONTROLLIERTES DOKUMENT.

DIMENSIONS: DIMENSIONEN mm

TOLERANCES UNLESS OTHERWISE SPECIFIED: ALLGEMEINTOLERANZEN ± 0.2 mm
0 PLC ± 0.15 mm
1 PLC ± –
2 PLC ± –
3 PLC ± –
4 PLC ± –
ANGLES / WINKEL ± 1.5°

MATERIAL: SEE TABLE
FINISH / OBERFLAECHE / FARBE: SEE TABLE

DWN 25–JUN–2001 C. Goetz
CHK 25–JUN–2001 J. Granzow
APVD –
PRODUCT SPEC PRODUKTSPEZ 108–18027
APPLICATION SPEC VERARBEITUNGSSPEZ 114–18020
WEIGHT GEWICHT –

TE Connectivity

NAME: DIA. 2.5MM SOCKET CONTACT
DIA 2.5mm Buchsenkontakt

SIZE A1 | CAGE CODE 00779 | DRAWING NO ZEICHNUNGS–NR. C–1355065 | RESTRICTED TO NUR FUER –

CUSTOMER DRAWING / KUNDENZEICHNUNG | SCALE MASSSTAB 5:1 | SHEET BLATT 1 OF VON 1 | REV A6

4805 (3/11)