THIS DRAWING IS UNPUBLISHED. RELEASED FOR PUBLICATION 20
© COPYRIGHT 20 BY - ALL RIGHTS RESERVED.

LOC	DIST
CM	00

REVISIONS

P	LTR	DESCRIPTION	DATE	DWN	APVD
	P	REVISED PER ECO-11-005027	14MAR2011	RK	HMR

1. RECOMMENDED PANEL THICKNESS 1.57-2.3.
2. PANEL MUST BE PUNCHED SO THAT HOUSING ENTERS THE PANEL IN THE SAME DIRECTION AS THE PUNCH.
3. CIRCUIT IDENTIFIERS LOCATED APPOXIMATELY AS SHOWN.

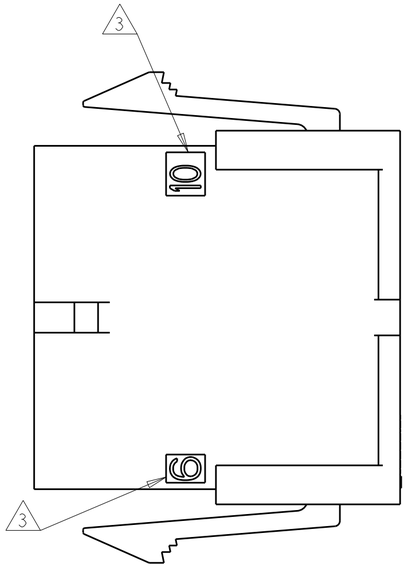

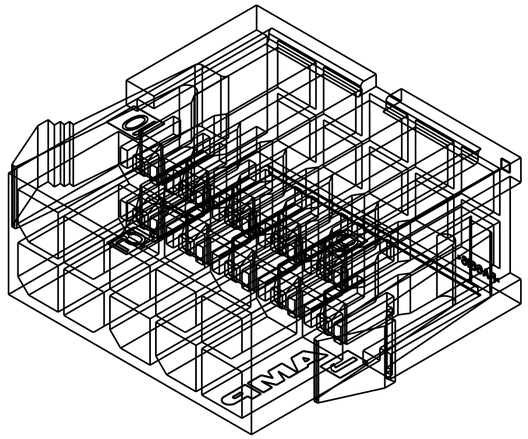

SCALE 5:1

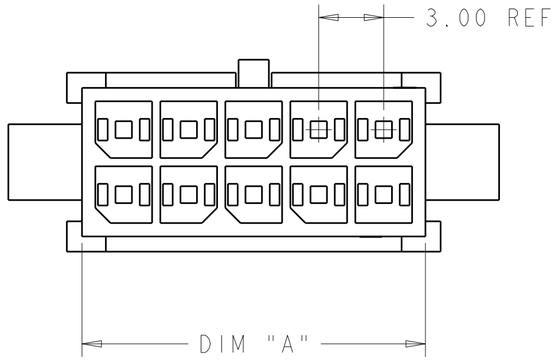

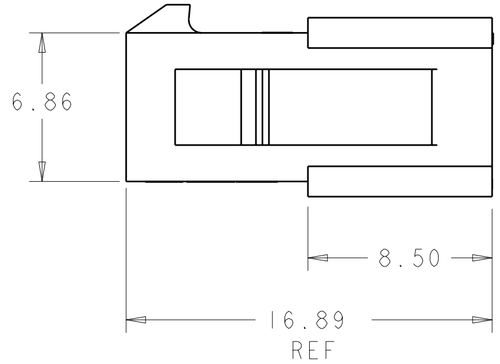

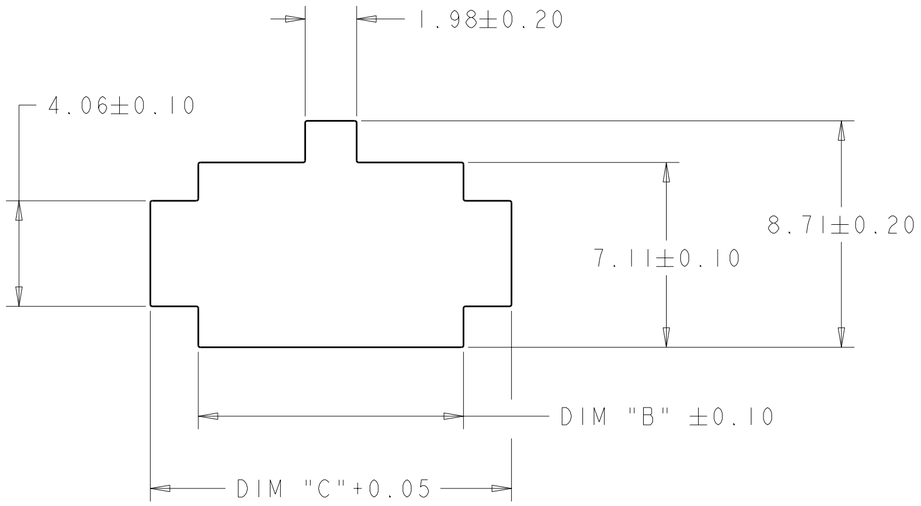

PANEL CUT-OUT 1

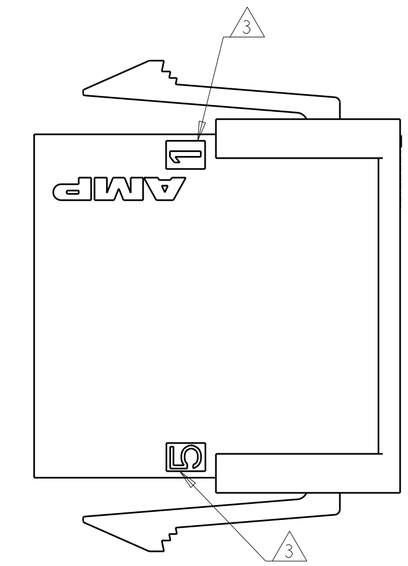

DIM C	DIM B	DIM A	NO. OF POS.	PART NUMBER
40.88	37.20	36.85	24	2-794615-4
37.88	34.20	33.85	22	2-794615-2
34.88	31.20	30.85	20	2-794615-0
31.88	28.20	27.85	18	1-794615-8
28.88	25.20	24.85	16	1-794615-6
25.88	22.20	21.85	14	1-794615-4
22.88	19.20	18.85	12	1-794615-2
19.88	16.20	15.85	10	1-794615-0
16.88	13.20	12.85	8	794615-8
13.88	10.20	9.85	6	794615-6
10.88	7.20	6.85	4	794615-4
7.88	4.20	3.85	2	794615-2

METRIC

THIS DRAWING IS A CONTROLLED DOCUMENT.

DIMENSIONS: mm

TOLERANCES UNLESS OTHERWISE SPECIFIED:
0 PLC ±-
1 PLC ±-
2 PLC ±0.13
3 PLC ±-
4 PLC ±-
ANGLES ±-
FINISH -

MATERIAL NYLON, UL94V-0 BLACK

DWN	W J RUDY	29AUG2000
CHK	W DAVIS	29AUG2000
APVD	W DAVIS	29AUG2000

PRODUCT SPEC -
APPLICATION SPEC -
WEIGHT -

TE Connectivity

NAME PLUG HOUSING, 2 to 24 POSITION DUAL ROW, PANEL MOUNT MICRO MATE-N-LOK(TM)

SIZE	CAGE CODE	DRAWING NO	RESTRICTED TO
A2	00779	C-794615	-

CUSTOMER DRAWING | SCALE 6:1 | SHEET 1 OF 1 | REV P

1471-9 (3/11)

Pro/ENGINEER DRAWING