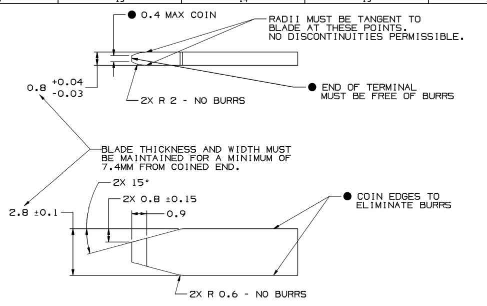

● THESE DIMENSIONS ARE CRITICAL TO THE MECHANICAL AND ELECTRICAL PERFORMANCE OF THE CONNECTION SYSTEM.

MATERIAL SPECIFICATIONS

RECOMMENDED

BASE METAL - CDA-210, EXTRA SPRING TEMPER

- * TIN PLATING (WHERE APPLICABLE TO 125°C MAX CONTINUOUS USAGE): 0.0050±0.0025 MM (200±100 μIN) ELECTROPLATED TIN.
- * USAGE OF PLATING TYPES OTHER THAN RECOMMENDED MUST BE APPROVED BY DELPHI PACKARD ELECTRIC SYSTEMS ENGINEERING.

MINIMUMS

ELECTRICAL CONDUCTIVITY - ≥28% IACS AT 20 °C. USE OF A MATERIAL WITH CONDUCTIVITY <28% IACS MUST BE APPROVED BY PACKARD ELECTRIC MATERIALS ENGINEERING.

TENSILE STRENGTH - 420 - 475 MPa

UNDERPLATING FOR TIN PLATING - FOR BASE MATERIALS CONTAINING 10% OR MORE ZINC, AN UNDERPLATE OF COPPER 0.0025 MM (100 μIN) MINIMUM THICK IS REQUIRED.

PROCESSING LUBRICANT - ANY PROCESSING LUBRICANT REMAINING ON TERMINALS MUST NOT VARNISH OR DEGRADE THE ELECTRICAL PERFORMANCE OF THE CONNECTION UP TO A MAXIMUM TEMPERATURE OF 150°C. PROCESSING LUBRICANTS MUST BE APPROVED BY DELPHI PACKARD ELECTRIC SYSTEMS ENGINEERING.

MATING BLADE INFORMATION

SYMBOL DEFINITION			MISSING SYMBOLS
A DIMENSION WITHOUT AN INSPECTION REPORT SYMBOL ( ) DOES NOT REQUIRE INSPECTION. IT MAY BE CONTROLLED ON THE INDIVIDUAL COMPONENT DRAWING.	TOTAL NO OF INSPECTIONS REQUIRED	43	NO MISSING SYMBOL NUMBER
	LAST NO. USED	39	

DWG STATUS DATE	STG	REV	N/P	CHG	ZONE	REVISION HISTORY	AUTH	DR	APVD 1	APVD 2
01MY06	R	F1	-	-		CLEARED REV COL, REDRAWN TO PD AND UPDATED MATING BLADE INFO	279456	EFS	JVM	WTM
08FE10	R	F2	-	-		ADDED TOYOTA SERVICE PART ORDERS NOTE	409959	HCG	HCG	DJS

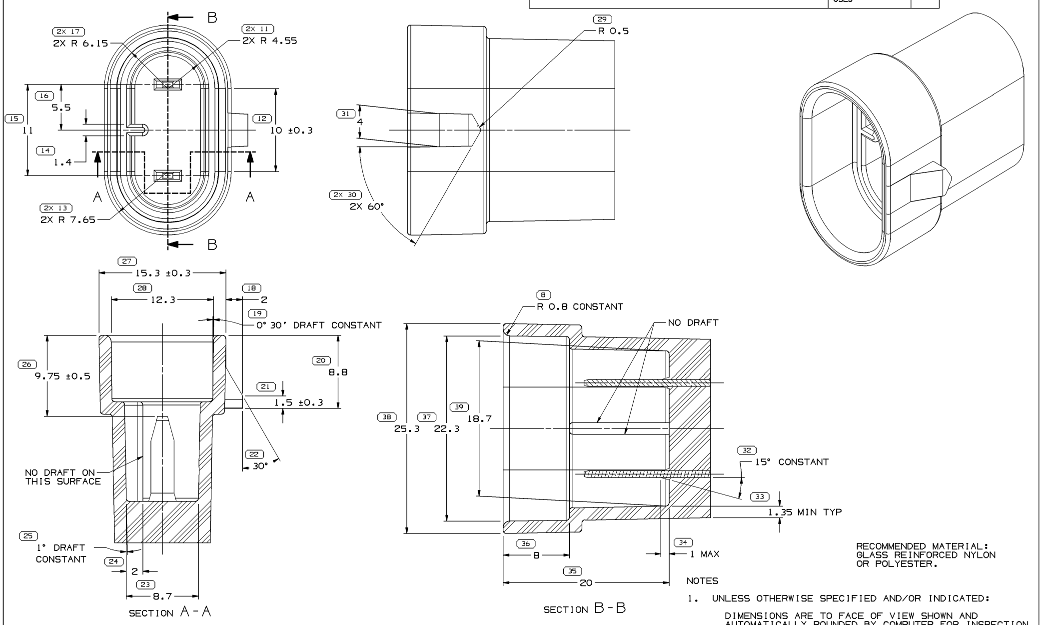

RECOMMENDED MATERIAL: GLASS REINFORCED NYLON OR POLYESTER.

NOTES

1. UNLESS OTHERWISE SPECIFIED AND/OR INDICATED:

   DIMENSIONS ARE TO FACE OF VIEW SHOWN AND AUTOMATICALLY ROUNDED BY COMPUTER FOR INSPECTION (SEE MATH MODEL FOR PRECISE DIMENSIONS). FOR ALL OTHER DIMENSIONS NOT SHOWN BUT REQUIRED FOR TOOL BUILD, SEE MATH MODEL FOR PRECISE TOOL PATH DATA.
   ALL RADII 0.4
   DRAFT IS 1° MAX ON ALL OUTSIDE SURFACES.
   LOCKING FEATURES ARE IDENTICAL.

2. SEALING SURFACES MUST BE FREE OF DEFECTS AND PARTING LINES.

MATING CONNECTOR INFORMATION

INSPECTION SYMBOLS SHOWN IN THESE VIEWS ARE FOR REFERENCE ONLY

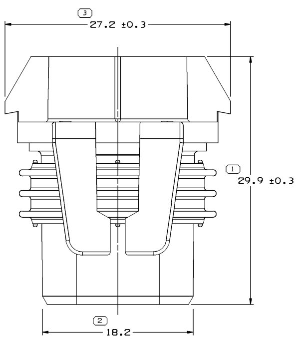

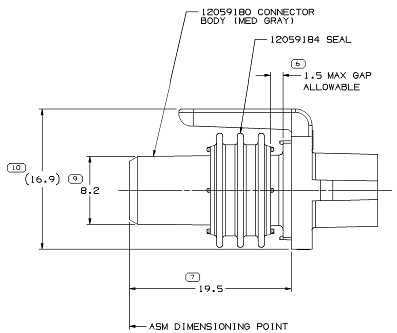

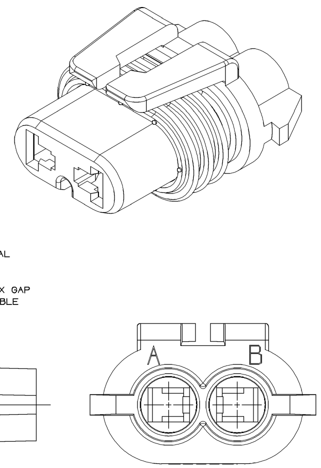

NOTES

1. UNLESS OTHERWISE SPECIFIED AND/OR INDICATED:

   DIMENSIONS ARE TO FACE OF VIEW SHOWN AND AUTOMATICALLY ROUNDED BY COMPUTER FOR INSPECTION (SEE MATH MODEL FOR PRECISE DIMENSIONS). FOR ALL OTHER DIMENSIONS NOT SHOWN BUT REQUIRED FOR TOOL BUILD, SEE MATH MODEL FOR PRECISE TOOL PATH DATA.

2. WHEN PARTS ARE SHIPPED, THEY MUST BE PACKED IN PLASTIC BAGS OR SHIPPING CONTAINERS MUST BE LINED WITH PLASTIC LINERS. BAGS OR LINERS MUST BE SEALED TO AVOID ENTRY OF FOREIGN MATTER.

3. SEALING CODE 3 - DESIGN WILL PASS SALT FOG AND IMMERSION TEST AFTER CONDITIONING AS SPECIFIED IN ESA-644 (WEATHER-PACK), ESA-710 (METRI-PACK), ESA-650 (UNDERHOOD MICRO-PACK), C-4006 (WORLD CONNECTOR), ETC. - WHEN MATED TO MATING PART OR EQUIVALENT

4. THIS PART IS NOT CONTROLLED FOR AUTOMATIC FEEDING.

5. THIS PRODUCT IS NOT CATEGORIZED AS AN APPEARANCE ITEM, MINOR IMPERFECTIONS INCLUDING, BUT NOT LIMITED TO, FLOW MARKS, COLOR BLEMISHES, GATE VESTIGE, AND SOFT FLASH THAT DO NOT AFFECT THE FIT, FORM, OR FUNCTION OF THE PART ARE PERMISSIBLE PER DPNP-4.7-CS-01.

6. FOR TOYOTA SERVICE PART ORDERS OF PART 90080-98038 CONNECTOR 12059181 AND TPA 12059185 MUST BE ASSEMBLED TOGETHER PRIOR TO SHIPMENT.

7. FOR APPLICATION DATA SEE THE APPLICATION DRAWING.

(N/A) PROCESS SENSITIVE DIMENSION

DIMENSIONS ENCLOSED IN ( ) INDICATE REFERENCE DIMENSIONS AND NO TOLERANCE LIMITS ARE ESTABLISHED

DIMENSIONAL RANGE (MM)									CHART E1
FROM TO	> 0 20	> 20 30	> 30 70	> 70 100	>100 150	>150 200	>200 250	>250 300	>300 400
TOLERANCE UNLESS OTHERWISE SPECIFIED	±0.15	±0.2	±0.3	±0.4	±0.5	±0.6	±0.8	±1	±1.2

ANGULAR TOLERANCE ±2°

DWG TYPE: PART DRAWING

STYLE

VOLUME (CM³) | DISTR CODE

UNLESS OTHERWISE SPECIFIED

THIS DOCUMENT IS IN ACCORDANCE WITH ASME Y14.5M-1994 AS AMENDED BY THE GM GLOBAL DIMENSIONING AND TOLERANCING ADDENDUM-2001. SEPARATE PATTERNS OF FEATURES MAY BE GAGED SEPARATELY REGARDLESS OF DATUM REFERENCES.

ALL DIMENSIONS ARE IN MILLIMETERS

REFERENCE

THIRD ANGLE PROJECTION

DO NOT SCALE

USE MATH DATA

CAD NX

DELPHI

DELPHI PACKARD ELECTRICAL/ELECTRONIC ARCHITECTURE
WARREN, OH

		DATE
DR		
APVD1	YERR L. BOZIS	21MY85
APVD2	A. SWARTZ	11JN85
APVD3	P. REEDY	14JN85
APVD4		
APVD5		

SUBSTANCES OF CONCERN AND RECYCLED CONTENT PER DELPHI 10949001

MATERIAL: SEE DRAWING

DRAWING NAME: ASM CONN 2 F M/P 280 SLD

DRAWING NUMBER: 12059181

SIZE	SCALE	FRAME NO	SHEET NO	STG	REV	N/P
A0	5:1	1 OF 1	1 OF 1	R	F2	-

User: tzrxny Part: 12059181-CUS01-S01 Date: 10-Feb-10 Time: 15:06 Message: