SYMBOL DEFINITION		
A DIMENSION WITHOUT AN INSPECTION REPORT SYMBOL ( ) DOES NOT REQUIRE INSPECTION. IT MAY BE CONTROLLED ON THE INDIVIDUAL COMPONENT DRAWING.	TOTAL NO OF INSPECTIONS REQUIRED	10
	LAST NO. USED	9

MISSING SYMBOLS
NO MISSING SYMBOL NUMBER

DWG STATUS					ZONE	REVISION HISTORY	AUTH	DR	APVD 1	APVD 2
DATE	STG	REV	N/P	CHG						
11DE01	R	07	-	-		CLEARED REVISION COLUMN AND ALL PARTS - REDRAWN TO PD	218242	AMG	AMG	RC
26JL06	R	08	-	-		12103584 - UPDATED PDM ATTRIBUTES	2B3016	JBD	AUG	EJM

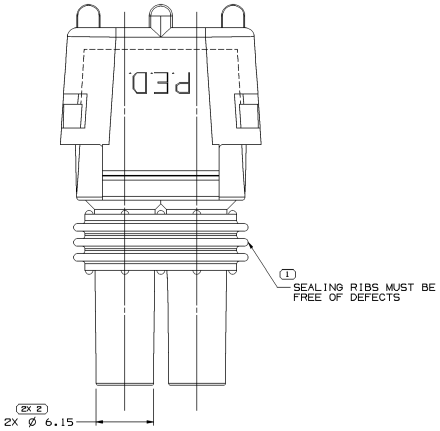

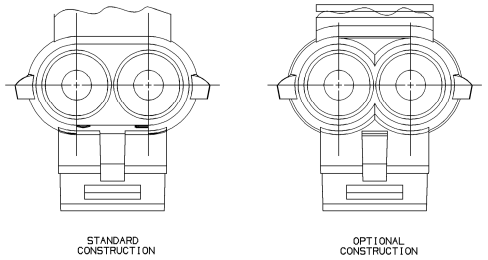

CABLE END VIEW OF CONN BODY

INDEX CODES
(ALSO SEE HANDBOOK)

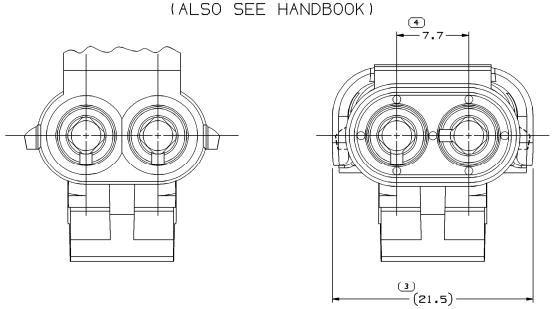

INDEX SLOT ARRANGEMENT

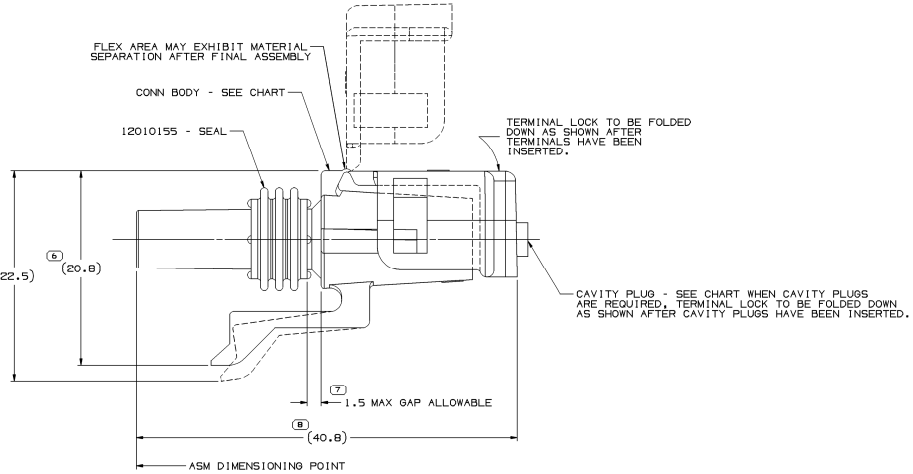

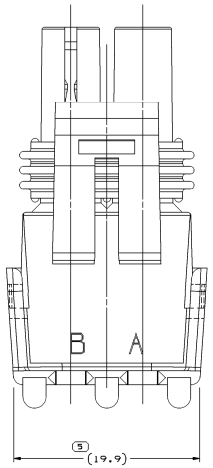

NOTES

1. UNLESS OTHERWISE SPECIFIED AND/OR INDICATED: DIMENSIONS ARE TO FACE OF VIEW SHOWN AND AUTOMATICALLY ROUNDED BY COMPUTER FOR INSPECTION (SEE MATH MODEL FOR PRECISE DIMENSIONS). FOR ALL OTHER DIMENSIONS NOT SHOWN BUT REQUIRED FOR TOOL BUILD, SEE MATH MODEL FOR PRECISE TOOL PATH DATA.
2. USE FEMALE TERMINAL 12089188 OR EQUIVALENT FOR "IN-LINE" APPLICATIONS. USE MALE TERMINAL 12089040 OR EQUIVALENT FOR "PANEL MOUNT" APPLICATIONS.
3. USE CABLE SEAL 12015323 OR EQUIVALENT.
4. WHEN PARTS ARE SHIPPED, THEY MUST PACKED IN PLASTIC BAGS OR SHIPPING CONTAINERS MUST BE LINED WITH PLASTIC LINERS. BAGS OR LINERS MUST BE SEALED TO AVOID ENTRY OF FOREIGN MATTER.
5. SEALING CODE 3 - DESIGN WILL PASS SALT FOG AND IMMERSION TEST AFTER CONDITIONING AS SPECIFIED IN ESA-644 (WEATHER-PACK), ESA-710 (METRI-PACK), (WORLD CONNECTOR), ETC WHEN MATED TO MATING PART OR EQUIVALENT
6. WHEN DESIGNING A PART TO MATE TO THIS WEATHER PACK CONNECTOR, REQUEST THE LATEST COPY OF DRAWING NUMBER 120200B4 FROM THE PACKARD ELECTRIC DIVISION.

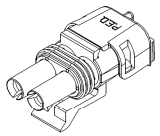

VIEW SCALE DOES NOT REFLECT ACTUAL PART SIZE

PART NO	REV	N/P	STATUS	CONN BODY	STANDARD DESCRIPTION	APPLICATION	REF: TERMINAL/GENDER	TYPE	CAVITY PLUGS	MATING PART
12103584	A3	-		12103583	ASM CONN 2M W/P TWR	DEVICE	12089040/MALE	I	-	DEVICE
12047672	A3	-		12015782	ASM CONN 2 W/P TWR	BLOCK-OFF	NONE	I	12010300-2 PLCS FOLD COVER	12010973
12045898	A4	-	OBSOLETE	12047690	ASM CONN 2F W/P TWR	IN-LINE	12089188/FEMALE	I	-	12146103
12020778	A	-	OBSOLETE	12020777	ASM CONN 2M W/P TWR	DEVICE	12089040/MALE	II	-	DEVICE
12015792	A3	-		12015782	ASM CONN 2F W/P TWR	IN-LINE	12089188/FEMALE	I	-	12010973

(N/A) PROCESS SENSITIVE DIMENSION

DIMENSIONS ENCLOSED IN ( ) INDICATE REFERENCE DIMENSIONS AND NO TOLERANCE LIMITS ARE ESTABLISHED

| DIMENSIONAL RANGE (MM) | | | | | |