D

THIS DRAWING AND DESIGN HEREON CONSTITUTES A PROPRIETARY DESIGN OF PACKARD ELECTRIC DIVISION AND IS NOT TO BE DUPLICATED OR REPRODUCED WITHOUT AUTHORITY OF PACKARD ELECTRIC DIVISION.

DO NOT SCALE

PART NO. 1201 5864

DATE	SYM	REVISION RECORD	AUTHORITY	DR	CK
18JL88	—	REDRAWN & REVISED; "PATENT PENDING"			
		REMOVED - REV LEVEL REMAINS AT "E"	120124	AL	DKS
18JL88	F	PICTURE REVISED	120125	AL	DKS
18JL88	G	PICTURE REVISED	120126	AL	DKS
17AP90	H	REVISED GRAPHICS	133265	JC	JC
30JN93	J	REVISED GRAPHICS - 5.20 WAS 5.40	154898	RLB	BKD

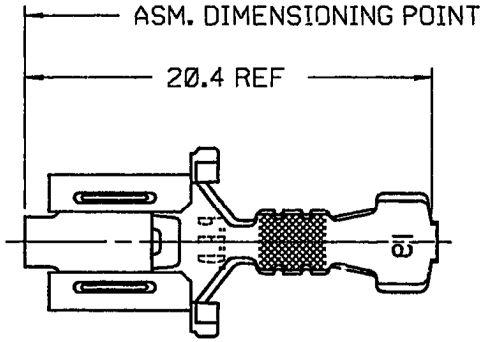

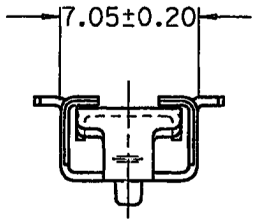

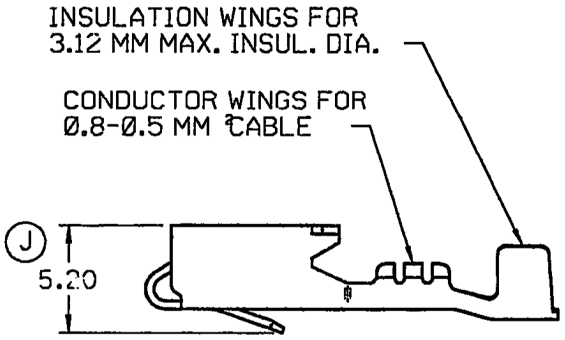

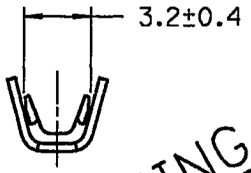

WARNING
GEOMETRY MAY NOT BE DRAWN TO SCALE

PACKARD ELECTRIC DIVISION
GENERAL MOTORS CORPORATION
WARREN, OHIO

0-
97A
17V
61P
5V(2)

PED/INTERGRAPH EMS

FILE SPEC: bdew /usr2/bdew/5864.plt 01-SEP-1993 20:54

THIRD ANGLE PROJECTION

METRIC
DIMENSIONS ARE IN MILLIMETERS UNLESS OTHERWISE SPECIFIED.

CODE NO. 6900

TOLERANCE UNLESS OTHERWISE SPECIFIED
DECIMAL: ONE PLACE ± 0.3, TWO PLACE ± 0.15
ANGULAR ±2°

Q.C.

DWG. DATE 06JN80 | SCALE NONE | DR.

EST. NO. | CK. F. HESTON | DATE 12JA85

REFERENCE NO. 12015135 "E" SIZE | SHEET #1 | APPR. | DATE

APPR. R.D. KEARNS | DATE 31JA85

MATERIAL SPEC. 0.406 THK. TIN BRASS-TIN PLATED

NAME TERM F M/P 630 SPL

PART NO. 1201 5864 OUTLINE DRAWING | SIZE B

PACKARD ELECTRIC