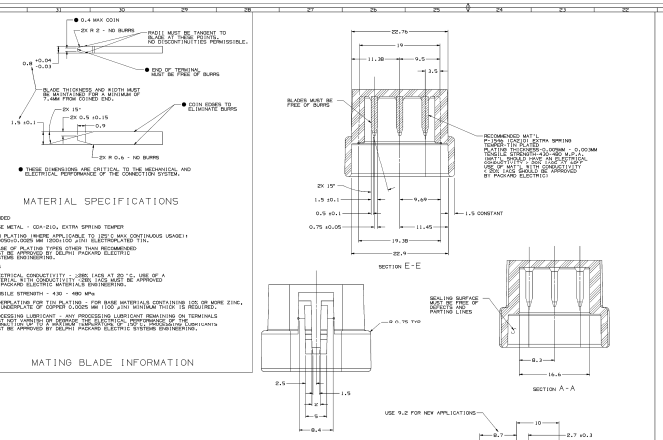
0.4 MAX COIN
2X R 2 - NO BURRS
RADII MUST BE TANGENT TO BLADE AT THESE POINTS. NO DISCONTINUITIES PERMISSIBLE.
0.8 +0.04 -0.03
END OF TERMINAL MUST BE FREE OF BURRS
BLADE THICKNESS AND WIDTH MUST BE MAINTAINED FOR A MINIMUM OF 7.4MM FROM COINED END.
COIN EDGES TO ELIMINATE BURRS
2X 15°
2X 0.5 ±0.15
1.9 ±0.1
0.9
2X R 0.6 - NO BURRS
THESE DIMENSIONS ARE CRITICAL TO THE MECHANICAL AND ELECTRICAL PERFORMANCE OF THE CONNECTION SYSTEM.
22.76
19
11.38
9.5
3.5
BLADES MUST BE FREE OF BURRS
RECOMMENDED MATL: BLADE:CDA-210, EXTRA SPRING TEMPER PLATING THICKNESS:0.0508MM - 0.0003MM TIN PLATING WHERE APPLICABLE TO 125°C MAX CONTINUOUS USAGE; HAVE BRIGHT HEAT AN ELECTRICAL CONDUCTIVITY - 28% IACS (IN AIR) MATERIALS MUST BE APPROVED BY DELPHI PACKARD ELECTRIC SYSTEMS ENGINEERING.
2X 15°
1.5 ±0.1
0.5 ±0.1
0.75 ±0.05
9.69
11.45
1.5 CONSTANT
19.38
22.9
SECTION E-E
MATERIAL SPECIFICATIONS
RECOMMENDED
BASE METAL - CDA-210, EXTRA SPRING TEMPER
• TIN PLATING WHERE APPLICABLE TO 125°C MAX CONTINUOUS USAGE; 0.0508MM-0.0381MM (2000U'IN) ELECTROPLATED TIN.
• USAGE OF PLATING TYPES OTHER THAN RECOMMENDED MUST BE APPROVED BY DELPHI PACKARD ELECTRIC SYSTEMS ENGINEERING.
MINIMUMS
ELECTRICAL CONDUCTIVITY - 28% IACS AT 20 °C; USE OF A MATERIAL WITH A LOWER CONDUCTIVITY MUST BE APPROVED BY PACKARD ELECTRIC MATERIALS ENGINEERING.
TENSILE STRENGTH - 430 - 480 MPa
UNDERPLATING FOR TIN PLATING - FOR BASE MATERIALS CONTAINING 10% OR MORE ZINC, AN UNDERPLATE OF COPPER 0.0025 MM (100 µ'IN) MINIMUM THICK IS REQUIRED.
PROCESSING LUBRICANT - ANY PROCESSING LUBRICANT REMAINING ON TERMINALS MUST BE COMPATIBLE WITH SUBSEQUENT PROCESSING. LUBRICANT MUST BE COMPATIBLE WITH SUBSEQUENT INSULATION OR CONTAMINATION SUBSTRATE. ANY LUBRICANTS MUST BE APPROVED BY DELPHI PACKARD ELECTRIC SYSTEMS ENGINEERING.
MATING BLADE INFORMATION
0.75 TYP
2.5
1.5
2
5
0.4
SEALING SURFACE MUST BE FREE OF DIRT, OIL AND PARTING LINES
8.2
16.6
SECTION A-A
USE 9.2 FOR NEW APPLICATIONS
USE 6.6 FOR NEW APPLICATIONS
2.7
2.7 ±0.1
10
1.25
0.1
2
10°
30°
1.5 ±0.1
20°
℄ OF SHROUD
7.29
3.04
7.3
2.9
9.8
6.9
3.45
3.47
10.66
10.8
9.4
0.5 MAX COIN
(0.4) ℄ OF SHROUD TO ℄ OF TERMINAL
0.82 ±0.04
R 0.75 CONSTANT
9.8 +0.2 -0.2
1 MAX
30° OPTIONAL
℄ OF TERMINAL
RECOMMENDED MATL: BLADE REINFORCED FILLED OR POLYESTER
18.9
SECTION B-B
4X NO DRAFT ON THESE SURFACES
B
A
E
2X 0.2
2X R
4X R
12
6
MATING CONNECTOR INFORMATION OTHER APPLICATIONS
NOTES
1. UNLESS OTHERWISE SPECIFIED AND/OR INDICATED:
DIMENSIONS ARE TO FACE OF VIEW SHOWN AND AUTOMATICALLY PRODUCED BY COMPUTER FOR INSPECTION (SEE MATH MODEL FOR PRECISE DIMENSIONS) FOR ALL OTHER DIMENSIONS NOT SHOWN BUT REQUIRED FOR TOOL BUILD, SEE MATH MODEL FOR PRECISE TOOL PATH DATA. ALL RADII 0.4
DRAFT IS 1° ON ALL OUTSIDE SURFACES
2. THE SHAPE OF THE BARRUP AND LOCK ARE REPRESENTATIVE. THE SHAPE OF THE BARRUP MAY BE MODIFIED TO ADJUST FORCES AND/OR VOLUME BETWEEN AND PERMITTED AS LONG AS FUNCTION IS MAINTAINED
3. WHEN USING THIS INFORMATION FOR A NEW DESIGN, REQUEST THE LATEST COPY OF THIS PRINT FROM PACKARD ELECTRIC DIVISION.
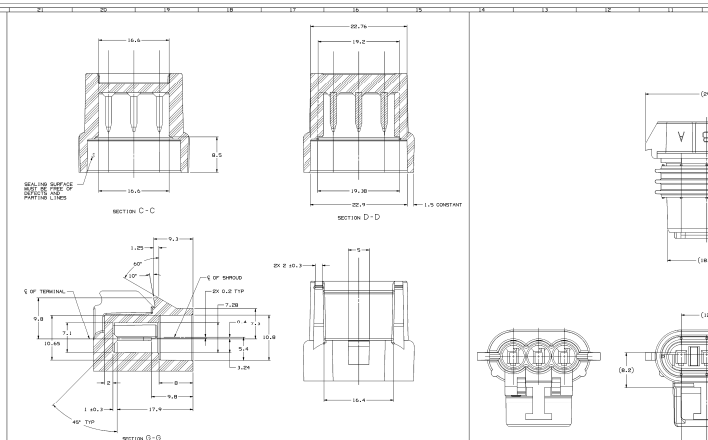
16.6
8.5
SEALING SURFACE MUST BE FREE OF DIRT, OIL AND PARTING LINES
16.6
SECTION C-C
22.76
19.2
19.38
22.9
1.5 CONSTANT
SECTION D-D
1.25
9.3
50°
10°
℄ OF TERMINAL
℄ OF SHROUD
2X 0.2 TYP
7.29
9.8
7.1
10.65
0.4
5.4
10.8
1.24
2
8
9.8
1 ±0.3
17.9
45° TYP
SECTION G-G
2X 2 ±0.3
5
16.4
23.8
22
45°
13 ±0.2
R
R 1.15
R 1 ±0.3
9.5 TYP
3.27
11.4
SECTION F-F
4X NO DRAFT ON THESE SURFACES
G
F
C
D
2X R
2X R
2X R
B
6
12
MATING CONNECTOR INFORMATION-ABS VI
NOTES
1. UNLESS OTHERWISE SPECIFIED AND/OR INDICATED:
DIMENSIONS ARE TO FACE OF VIEW SHOWN AND AUTOMATICALLY PRODUCED BY COMPUTER FOR INSPECTION (SEE MATH MODEL FOR PRECISE DIMENSIONS) FOR ALL OTHER DIMENSIONS NOT SHOWN BUT REQUIRED FOR TOOL BUILD, SEE MATH MODEL FOR PRECISE TOOL PATH DATA.
ALL RADII 0.4
DRAFT IS 1° ON ALL OUTSIDE SURFACES
2. RECOMMENDED MATERIAL - GLASS FILLED NYLON OR POLYESTER
3. WHEN USING THIS INFORMATION FOR A NEW DESIGN, REQUEST THE LATEST COPY OF THIS PRINT FROM PACKARD ELECTRIC DIVISION.
DRAWING NUMBER 5324700
SYMBOL DEFINITION
A DIMENSION WITHOUT AN INSPECTION REPORT SYMBOL ALSO HAS NO INSPECTION. IT MAY BE CONTROLLED ON THE INDIVIDUAL COMPONENT DRAWING.
TOTAL NO OF MISSING SYMBOLS REQUIRED 1
LAST NO. USED 1
MISSING SYMBOLS
NO MISSING SYMBOL NUMBER
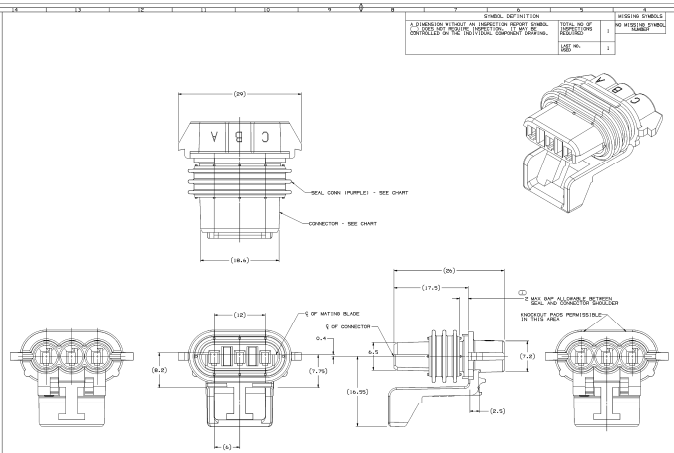
(29)
C B A
SEAL CONN (PURPLE) - SEE CHART
CONNECTOR - SEE CHART
(18.4)
(12)
℄ OF MATING BLADE
℄ OF CONNECTOR
0.4
(8.2)
(7.75)
(6)
(29)
(17.5)
6.5
(16.55)
(2.5)
(1) MAX GAP ALLOWABLE BETWEEN SEAL AND CONNECTOR SHOULDER
KNOCKOUT PADS PERMISSIBLE IN THIS AREA
(7.2)
OPTIONAL CONSTRUCTION
(15.2)
NOTES
1. UNLESS OTHERWISE SPECIFIED AND/OR INDICATED:
DIMENSIONS ARE TO FACE OF VIEW SHOWN AND AUTOMATICALLY PRODUCED BY COMPUTER FOR INSPECTION (SEE MATH MODEL FOR PRECISE DIMENSIONS) FOR ALL OTHER DIMENSIONS NOT SHOWN BUT REQUIRED FOR TOOL BUILD, SEE MATH MODEL FOR PRECISE TOOL PATH DATA.
2. WHEN PARTS ARE SHIPPED THEY MUST BE PACKED IN PLASTIC BAGS OR SHIPPING CONTAINERS MUST BE LINED WITH PLASTIC LINERS. PLASTIC LINERS MUST BE SEALED TO AVOID ENTRY OF FOREIGN MATTER.
3. DESIGN WILL PASS SALT FOG AND IMMERSION TEST AFTER CONDITIONING AS SPECIFIED IN ESC-T10 (MEET) PRIOR TO MATING TO MATING PART OF EQUIVALENT.
4. FOR APPLICATION DATA SEE THE INDIVIDUAL APPLICATION DRAWINGS.
5. FOR PART NUMBER WITH ADHESIVE: USE WM10000 OR ADHESIVE APPROVED BY MATERIALS ENGINEERING TO BLOCK CONNECTOR SEAL TO CONNECTOR.
DRAWING NUMBER 5324700
DELPHI
DELPHI PACKARD ELECTRICAL/ELECTRONIC SYSTEMS
PART DRAWING
SIZE D
DO NOT SCALE DRAWING
UNLESS OTHERWISE SPECIFIED DIMENSIONS ARE IN MILLIMETERS
DESIGNED BY: MARCHAND TO TECHNOLOGY - DATA MANAGEMENT
DRAWN BY: MARCHAND
DRAWING NAME: 7X61 ASM CONN F W/P 250 BLD
DRAWING NUMBER: 5324700
SHEET 1 OF 1
SCALE: 1:1
DELPHI
I 23S4700