SYMBOL DEFINITION		
A DIMENSION WITHOUT AN INSPECTION REPORT SYMBOL ( ) DOES NOT REQUIRE INSPECTION. IT MAY BE CONTROLLED ON THE INDIVIDUAL COMPONENT DRAWING.	TOTAL NO OF INSPECTIONS REQUIRED	12
	LAST NO. USED	7

MISSING SYMBOLS
NO MISSING SYMBOL NUMBER

DWG STATUS DATE	STG	REV	N/P	CHG	ZONE	REVISION HISTORY	AUTH	DR	APVD 1	APVD 2
1BJN01	R	01	-	-		ALL PARTS - UPDATED PDM ATTRIBUTES	210955	EGR	EAR	GMC
07DE01	R	02	-	-		12077756 - UPDATED PDM ATTRIBUTES	215063	HAM	HAM	DB
19MY04	R	03	-	-		15496842 - RELEASED	255176	GPS	FRG	MJD
04AP06	R	04	-	-		15324327 - OBSOLETE	278839	CCV	FRG	BDG
10AP07	R	05	-	-		13642557 - RELEASED	401103	GLG	JVM	GGI

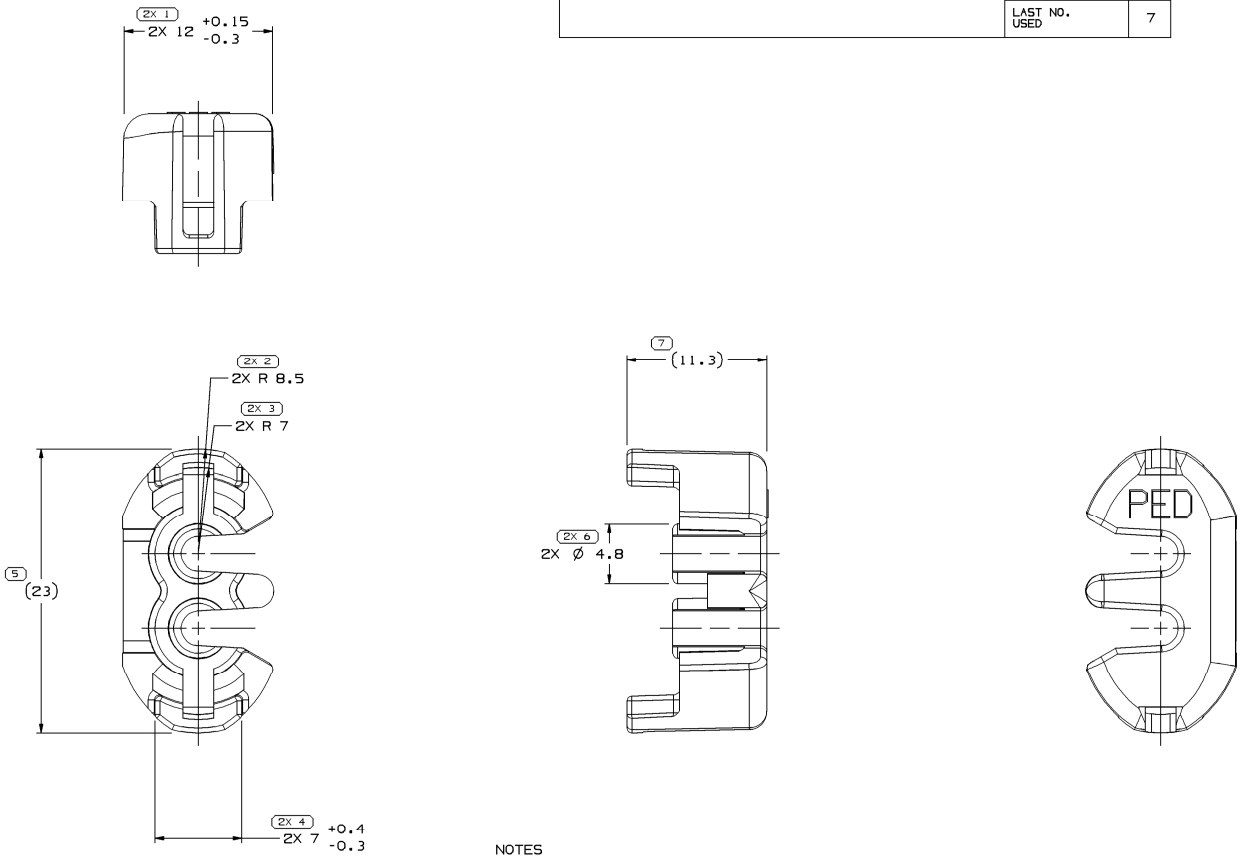

NOTES

1. UNLESS OTHERWISE SPECIFIED AND/OR INDICATED:

   DIMENSIONS ARE TO FACE OF VIEW SHOWN AND AUTOMATICALLY ROUNDED BY COMPUTER FOR INSPECTION (SEE MATH MODEL FOR PRECISE DIMENSIONS). FOR ALL OTHER DIMENSIONS NOT SHOWN BUT REQUIRED FOR TOOL BUILD, SEE MATH MODEL FOR PRECISE TOOL PATH DATA.

2. MATERIAL RECYCLING CODE PER ISO 11469. (2.3)X(0.1) CHARACTERS AS SHOWN TO BE LOCATED ON ANY EXTERIOR SURFACE.
3. THIS PART IS NOT CONTROLLED FOR AUTOMATIC FEEDING.
4. REFERENCE MATING COMPONENTS OR EQUIVALENT:

   CONNECTOR TWO WAY 150 SERIES MALE & FEMALE PUSH-TO SEAT

5. (2.3)X(0.1) DELPHI CORPORATE BRAND TO BE LOCATED ON ANY EXTERIOR SURFACE, PREFERABLY VISIBLE AT FINAL ASSEMBLY. OPTIONAL CONSTRUCTION TO BE "PED".
6. MAX CABLE DIAMETER THAT WILL FIT PART IS Ø 2.8
7. DUE TO HEAT REQUIREMENTS, THE MATERIAL SPECIFIED CANNOT BE CHANGED WITHOUT THE APPROVAL OF THE SUPERVISOR OF COMPONENT LIAISON OR HIS DELEGATE.

PART NO	REV	N/P	STATUS	MATERIAL SPECIFICATION AND COLOR	VOL CM³
13642557	01	-	-	M3592015 PA66 HS IM GRN LT	0.931
15496842	01	-		M3592004 PA66 HS IM-RED	0.931
15324327	02	AA	OBSOLETE	M3586001 PA46 HS IM-NAT	0.931
12124790	02	-		M3592025 PA66 HS IM-GRA MD	0.931
12077755	07	-		M3592001 PA66 HS IM-BLK	0.931
12052634	08	AA		M3592008 PA66 HS IM-BLU	0.931

6 PROCESS SENSITIVE DIMENSION

DIMENSIONS ENCLOSED IN ( ) INDICATE REFERENCE DIMENSIONS AND NO TOLERANCE LIMITS ARE ESTABLISHED

DIMENSIONAL RANGE (MM) FROM TO	> 0 20	>20 30	> 30 70	> 70 100	>100 150	>150 200	>200 250	>250 300	>300 400
TOLERANCE UNLESS OTHERWISE SPECIFIED	±0.15	±0.2	±0.3	±0.4	±0.5	±0.6	±0.8	±1	±1.2

CHART E1

ANGULAR TOLERANCE ±2°

DWG TYPE: PART DRAWING

STYLE

VOLUME (CM³): SEE CHART

DISTR CODE: D

UNLESS OTHERWISE SPECIFIED

THIS DOCUMENT IS IN ACCORDANCE WITH ASME Y14.5M-1994 AS AMENDED BY THE GM GLOBAL DIMENSIONING AND TOLERANCING ADDENDUM-2001. SEPARATE PATTERNS OF FEATURES MAY BE MADE SEPARATELY REGARDLESS OF DATUM REFERENCES.

ALL DIMENSIONS ARE IN MILLIMETERS

REFERENCE

THIRD ANGLE PROJECTION

DO NOT SCALE

USE MATH DATA

UGS UNIGRAPHICS

DELPHI

DELPHI PACKARD ELECTRICAL/ELECTRONIC ARCHITECTURE
WARREN, OH

		DATE
DR		
APVD1	M. PADILLA	26OC98
APVD2	C.MIRANDA	26OC98
APVD3	C.MIRANDA	26OC98
APVD4		
APVD5		

SUBSTANCES OF CONCERN AND RECYCLED CONTENT PER DELPHI 10949001

MATERIAL: SEE CHART

DRAWING NAME: TAXI LOCK SECONDARY TPA M/P

DRAWING NUMBER: 12077756

SIZE	SCALE	FRAME NO	SHEET NO	STG	REV	N/P
A1	5:1	1 OF 1	1 OF 1	R	05	-

User: 22017
Plot: 12077756-CUSD1-S01 Date: 16-Apr-07 Time: 23:19
Message: