AMPLIMITE .050 Series Shielded Backshell Kits, With Spring Latches, Series III

Style A
Straight Exit
with Latches

Style A
Angled Exit
with Latches

Style B
Straight Exit
with Latches

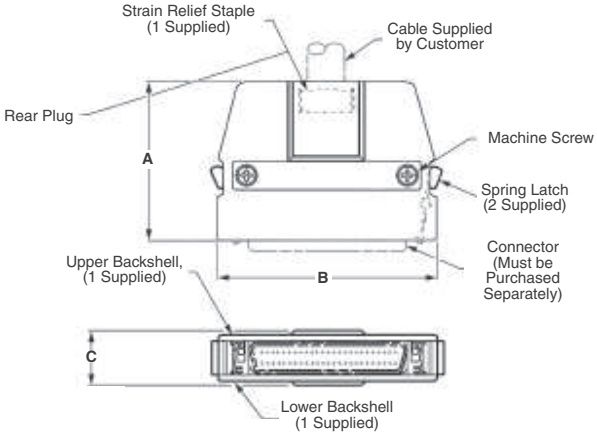

Style A
Straight Exit with Latches

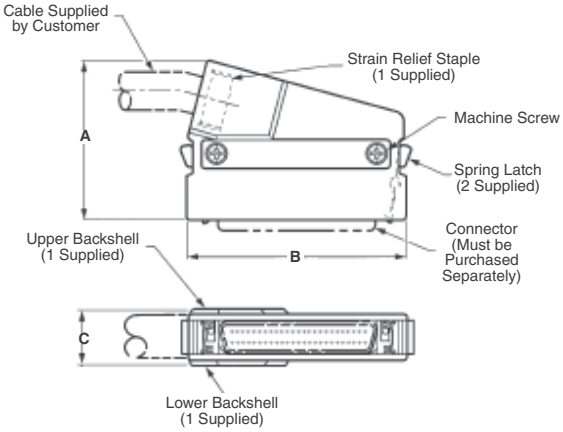

Style A
Angled Exit with Latches

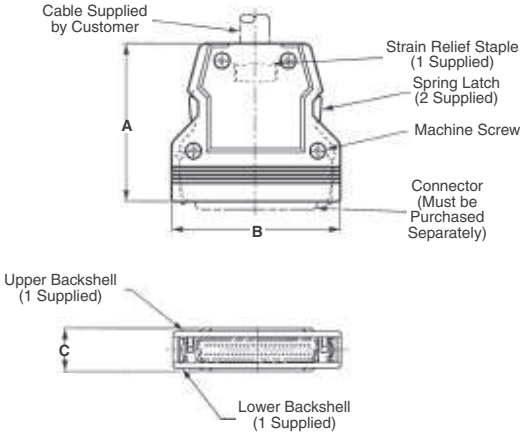

Style B
Straight Exit with Latches

Materials:

Backshell—Zinc, plated nickel over copper

Spring Latch—Stainless steel

2-56 Screws—Stainless steel

Strain Relief Staple—Steel, plated tin over nickel

Technical Documents:

Product Specifications—108-1228

Application Specifications—114-40029

Instruction Sheet—408-9427

Note: Extra pin contact protection is provided by rails on the receptacle, which facilitate a straight-out unmating motion. A side-to-side rocking motion should not be used to disengage the connector system.

Dimensions are shown for reference purposes only. Specifications subject to change.

Dimensions are in inches and millimeters unless otherwise specified.
USA: +1 (800) 522-6752

Canada: +1 (905) 475-6222
Mexico/C. Am.: +52 (0) 55-1106-0800
Latin/S. Am.: +54 (0) 11-4733-2200
Germany: +49 (0) 6251-133-1999

UK: +44 (0) 800-267666
France: +33 (0) 1-3420-8686
Netherlands: +31 (0) 73-6246-999
China: +86 (0) 400-820-6015

AMPLIMITE .050 Series Shielded Backshell Kits, With Spring Latches, Series III (Continued)

No. of Pos.	Style	Dimensions A	Dimensions B	Dimensions C	Pkg.	Max. O.D.	Straight Exit with Latches	Angled Exit with Latches
20	A	**1.290** 32.77	**1.215** 30.86	**.400** 10.16	Individual	**.270** 6.86	5749190-1	5749199-1
26	A	**1.290** 32.77	**1.365** 34.67	**.400** 10.16	Individual	**.270** 6.86	—	5749609-1
	B	**1.290** 32.77	**1.335** 33.91	**.400** 10.16	Individual	**.270** 6.86	749608-2	—
40	A	**1.290** 32.77	**1.715** 43.56	**.400** 10.16	Individual	**.320** 8.13	—	5749201-1
						.320 8.13	5749192-1	—
50	A	**1.395** 35.43	**1.965** 49.91	**.480** 12.19	Individual	**.400** 10.16	—	5749202-2
					Bulk	**.400** 10.16	5749202-3	—
					Individual	**.355** 9.02	5749193-1	—
						.400 10.16	5749193-2	—
	B	**1.800** 45.72	**1.965** 49.91	**.492** 12.50	Bulk	**.480** 12.19	5749889-3	—
					Individual	**.480** 12.18	5749889-4	—
68	A	**1.405** 35.69	**2.415** 61.34	**.520** 13.21	Individual	**.400** 10.16	—	5749204-1
						.440 11.18	5749195-2	5749204-2
80	A	**1.600** 40.64	**2.715** 68.96	**.565** 14.35	Individual	**.420** 10.67	—	5749205-1
						.500 12.70	749196-2	—
100	A	**1.725** 43.82	**3.215** 81.66	**.615** 15.62	Individual	**.500** 12.70	5749197-1	5749206-1
120	A	**1.725** 43.82	**3.715** 94.36	**.665** 16.89	Individual	**.550** 13.97	5749198-1	5749207-1

Note: All part numbers are RoHS compliant.