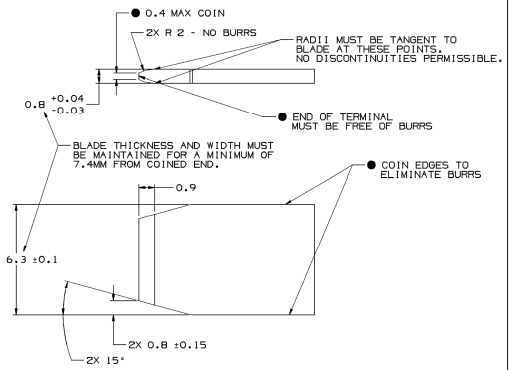

● THESE DIMENSIONS ARE CRITICAL TO THE MECHANICAL AND ELECTRICAL PERFORMANCE OF THE CONNECTION SYSTEM.

MATERIAL SPECIFICATIONS

RECOMMENDED

BASE METAL - CDA-210, EXTRA SPRING TEMPER

* TIN PLATING (WHERE APPLICABLE TO 125°C MAX CONTINUOUS USAGE): 0.0050±0.0025 MM (200±100 μIN) ELECTROPLATED TIN.
* USAGE OF PLATING TYPES OTHER THAN RECOMMENDED MUST BE APPROVED BY DELPHI PACKARD ELECTRIC SYSTEMS ENGINEERING.

MINIMUMS

ELECTRICAL CONDUCTIVITY - ≥28% IACS AT 20 °C. USE OF A MATERIAL WITH CONDUCTIVITY <28% IACS MUST BE APPROVED BY PACKARD ELECTRIC MATERIALS ENGINEERING.

TENSILE STRENGTH - 430 - 480 MPa

UNDERPLATING FOR TIN PLATING - FOR BASE MATERIALS CONTAINING 10% OR MORE ZINC, AN UNDERPLATE OF COPPER 0.0025 MM (100 μIN) MINIMUM THICK IS REQUIRED.

PROCESSING LUBRICANT - ANY PROCESSING LUBRICANT REMAINING ON TERMINALS MUST NOT VARNISH OR DEGRADE THE ELECTRICAL PERFORMANCE OF THE CONNECTION UP TO A MAXIMUM TEMPERATURE OF 150°C. PROCESSING LUBRICANTS MUST BE APPROVED BY DELPHI PACKARD ELECTRIC SYSTEMS ENGINEERING.

MATING BLADE INFORMATION

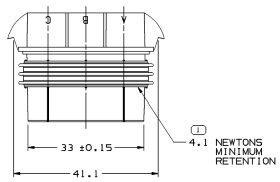

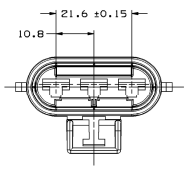

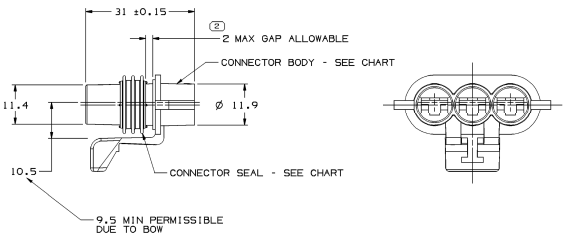

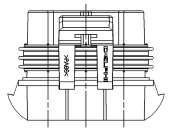

SYMBOL DEFINITION		
A DIMENSION WITHOUT AN INSPECTION REPORT SYMBOL (□) DOES NOT REQUIRE INSPECTION. IT MAY BE CONTROLLED ON THE INDIVIDUAL COMPONENT DRAWING.	TOTAL NO OF INSPECTIONS REQUIRED	2
	LAST NO. USED	2

MISSING SYMBOLS
NO MISSING SYMBOL NUMBER

DWG STATUS					ZONE	REVISION HISTORY	AUTH	DR	AP/D1	AP/D2
DATE	STS	REV	N/P	CHG					1	2
17FE93	R	-	-	-		12065793 - WAS SEPARATE "D" SIZE, REVISED; REV LEVEL REMAINS AT "A"	152084	CP		
17FE93	R	-	-	-		12124685 - RELEASED TO REV "A"	930005	CP		
02AU94	R	-	-	-		12065793 - OBSOLETE	940003	TW	TW	
18OC06	R	01	-	-		ALL ACTIVE PARTS - REDRAWN TO PD	285577	RMG	AMG	BDG
21JA08	R	02	-	-	-	ALL ACTIVE PARTS - AD CREATED, ADDED SHEET 1 OF 2	403544	WSM	DGL	WSM

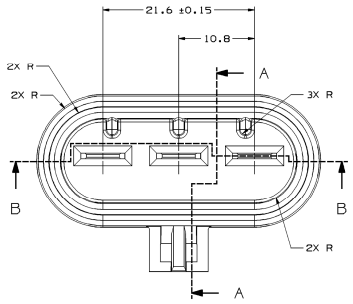

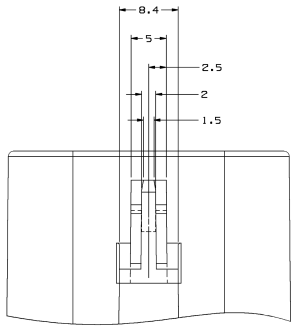

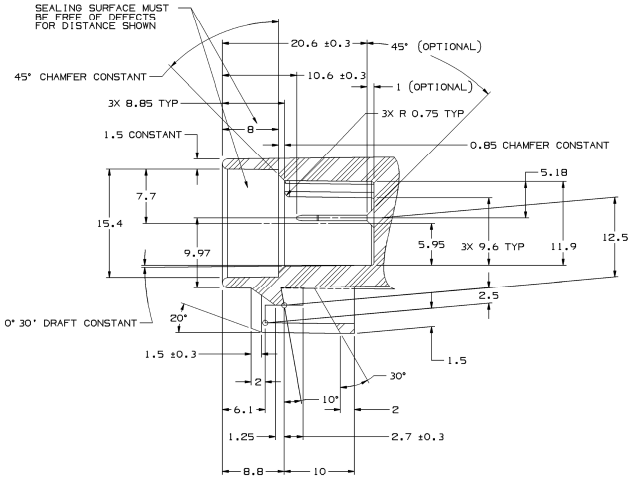

SECTION A - A

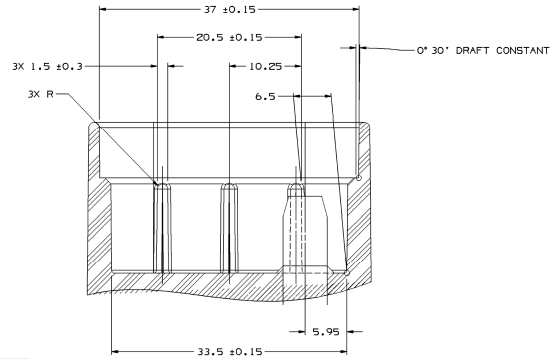

SECTION B - B

MATING CONNECTOR INFORMATION

SCALE 4:1

NOTES

1. UNLESS OTHERWISE SPECIFIED AND/OR INDICATED:

   DIMENSIONS ARE TO FACE OF VIEW SHOWN AND AUTOMATICALLY ROUNDED BY COMPUTER FOR INSPECTION (SEE MATH MODEL FOR PRECISE DIMENSIONS). FOR ALL OTHER DIMENSIONS NOT SHOWN BUT REQUIRED FOR TOOL BUILD, SEE MATH MODEL FOR PRECISE TOOL PATH DATA.
   ALL RADII 0.4
   DRAFT IS 1° MAX ON ALL OUTSIDE SURFACES.

2. RECOMMENDED MATERIAL - GLASS FILLED NYLON OR POLYESTER.

3. WHEN USING THIS INFORMATION FOR A NEW DESIGN, REQUEST THE LATEST COPY OF THIS PRINT FROM PACKARD ELECTRIC DIVISION.

NOTES

1. UNLESS OTHERWISE SPECIFIED AND/OR INDICATED:

   DIMENSIONS ARE TO FACE OF VIEW SHOWN AND AUTOMATICALLY ROUNDED BY COMPUTER FOR INSPECTION (SEE MATH MODEL FOR PRECISE DIMENSIONS). FOR ALL OTHER DIMENSIONS NOT SHOWN BUT REQUIRED FOR TOOL BUILD, SEE MATH MODEL FOR PRECISE TOOL PATH DATA.

2. WHEN PARTS ARE SHIPPED, THEY MUST BE PACKED IN PLASTIC BAGS OR SHIPPING CONTAINERS MUST BE LINED WITH PLASTIC LINERS. BAGS OR LINERS MUST BE SEALED TO AVOID FOREIGN MATTER.

3. DESIGN WILL PASS SALT FOG AND IMMERSION TEST AFTER CONDITIONING AS SPECIFIED IN ESA-710 (METRI-PACK), WHEN MATED TO MATING PART OR EQUIVALENT.

4. THIS PART IS NOT CONTROLLED FOR AUTOMATIC FEEDING.

5. SEE CABLE SEAL AND SECONDARY TERMINAL LOCK DRAWINGS FOR COMPATIBLE CABLE O.D. RANGE.

NOTES

6. FOR APPLICATION DATA SEE THE INDIVIDUAL APPLICATION DRAWINGS.

7. THIS PRODUCT IS NOT CATEGORIZED AS AN APPEARANCE ITEM. MINOR IMPERFECTIONS INCLUDING, BUT NOT LIMITED TO, FLOW MARKS, COLOR BLEMISHES, GATE VESTIGE, AND SOFT FLASH THAT DO NOT AFFECT THE FIT, FORM, OR FUNCTION OF THE PART ARE PERMISSIBLE PER NAP 4.10-18.

PART NO	REV	N/P	STATUS	REPLACED BY	CONNECTOR BODY		
12124685	A2	-	-	-	12064738	12124684	BRIGHT RED
12065793	A	-	OBSOLETE	12124685	12064738	12045698	GREEN
						PART NO	COLOR
						CONNECTOR SEAL	

DIMENSIONAL RANGE (MM)											
FROM	> 0	> 20	> 30	> 70	>100	>150	>200	>250	>300		
TO	20	30	70	100	150	200	250	300	400		
TOLERANCE UNLESS OTHERWISE SPECIFIED										CHART	±1
±0.15	±0.2	±0.25	±0.3	±0.4	±0.5	±1	±1.2				
ANGULAR TOLERANCE ±0°											

(N/A) PROCESS SENSITIVE DIMENSION

DIMENSIONS ENCLOSED IN ( ) INDICATE REFERENCE DIMENSION AND NO TOLERANCE LIMITS ARE ESTABLISHED

THIRD ANGLE PROJECTION

DO NOT SCALE

USE MATH DATA

NX

DWG TYPE: PART DRAWING

STYLE

VOLUME (CM³)

DISTR CODE

UNLESS OTHERWISE SPECIFIED
THIS DOCUMENT IS IN ACCORDANCE WITH ASME Y14.5M-1994 AS ADAPTED BY TEC ON GLOBAL DIMENSIONING AND GD&T STANDARD (TEC01). SEPARATE PATTERNS OF FEATURES MAY BE USED SEPARATELY REGARDLESS OF DATUM REFERENCES.

ALL DIMENSIONS ARE IN MILLIMETERS

REFERENCE

SUBSTANCES OF CONCERN AND RECYCLED CONTENT PER DELPHI (DP4900)

MATERIAL: SEE INDIVIDUAL DRAWINGS

DRAWING NAME: TAXI ASM CONN F M/P 630 SLD

DRAWING NUMBER: 12124687

SIZE	SCALE	FRAME NO	SHEET NO	STS	REV	N/P
A0	2:1	1 OF 1	1 OF 2	R	02	-

DELPHI

DELPHI PACKARD ELECTRICAL/ELECTRONIC ARCHITECTURE
WARREN, OH

		DATE
DR		
AP/D1	CHUCK PAPAS	17FE93
AP/D2	CHUCK PAPAS	17FE93
AP/D3	BRIAN GROUBERT	23OC06
AP/D4		
AP/D5		

Date: 07/12/
Time: 08:07:07
Filename: 12124687-D02-001
Drive: U:\Work\18
Template: Metric.prt